BB

000_Index
001_Revision history
002_CHANGE LIST
004_Block_Diagram
010_SM4450 CONTROL
011_SM4450 LPDDR4x
012_SM4450 CSI_DSI
013_SM4450_IQ_QLINK
014_SM4450_PULLUP_NTC
015_SM4450 GPIO
016_SM4450 PWR_0
017_SM4450_PWR_1
018_SM4450_PWR_2
019_SM4450_PWR_3
020_SM4450_GROUND
021_PM4450_HK/IO
022_PM4450_GND_GPIO
023_PM4450_VREG_S1_S4
024_PM4450_VREG_S5_S9
025_PM4450_VREG_LDOs
026_PM4450C
027_PM7250B_TIOMAN: CHARGE
027_PM7250B_TIOMAN: CHARGE
028_PM7250B_TIOMAN: MISC/GPIO/G
028_PM7250B_TIOMAN: MISC/GPIO/G
031_PMK4450
044_UFS_DDR SZ
060_WCD9370
066_SPK
067_Receiver
068_MIC
069_EARPHONE
070_Battery/Sidekey
072_LCD/CTP IF
075_CAMERA IF
078_LED/Flash/Vibrator/IRLED
080_FingerPrint
082_SENSORS
084_SIM/TF IF SZ
086_Testpoint/Shielding/GND
087_Sub PCB IF/USB IF

RF

102.RF_Transceiver_SDR435_WMSS SH
103.RF_Transceiver_SDR435_TRX SH
107.LDO/APT_Module SH
108.MMPA_Phase5N#0
109.Phase5N#0_DUP
110.MMPA_Phase5N#1
111.PRX_LNA#0
112.TXM_NZ5596M
113.N77_N78_PAM
114.DRX_MHB_MIMO
115.DRX_LMHB
116.ASDIV_FBRX
135.WWAN_ANT_PART1
136.WWAN_ANT_PART2
144.Connectivity_ANT
145.Connectivity_WCN3950
150.GPS
152.NFC_SN100T

Title:	000_Index	REV:	V1.0
DOCUMENT NO.:	88029_1_12M14_20230417_1755	Size	D
DEPARTMENT:	BB	DESIGNER:	ZHAOYUKUN
WINGTECH			
Date:	Monday, April 17, 2023	Sheet	1 of 59

001_Revision history

Title:	001_Revision history		REV: V1.0
DOCUMENT NO.:	88029_1_12M14_20230417_1755		Size D
DEPARTMENT:	BB	DESIGNER:	ZHAOYUKUN
WINGTECH			
Date:	Monday, April 17, 2023	Sheet 2	of 59

002_CHANGE LIST

Title:	002_CHANGE LIST	REV:	V1.0
DOCUMENT NO.:	88029_1_12M14_20230417_1755	Size	D
DEPARTMENT:	BB	DESIGNER:	ZHAOYUKUN
WINGTECH			
Date:	Monday, April 17, 2023	Sheet	3 of 59

004_Block_Diagram

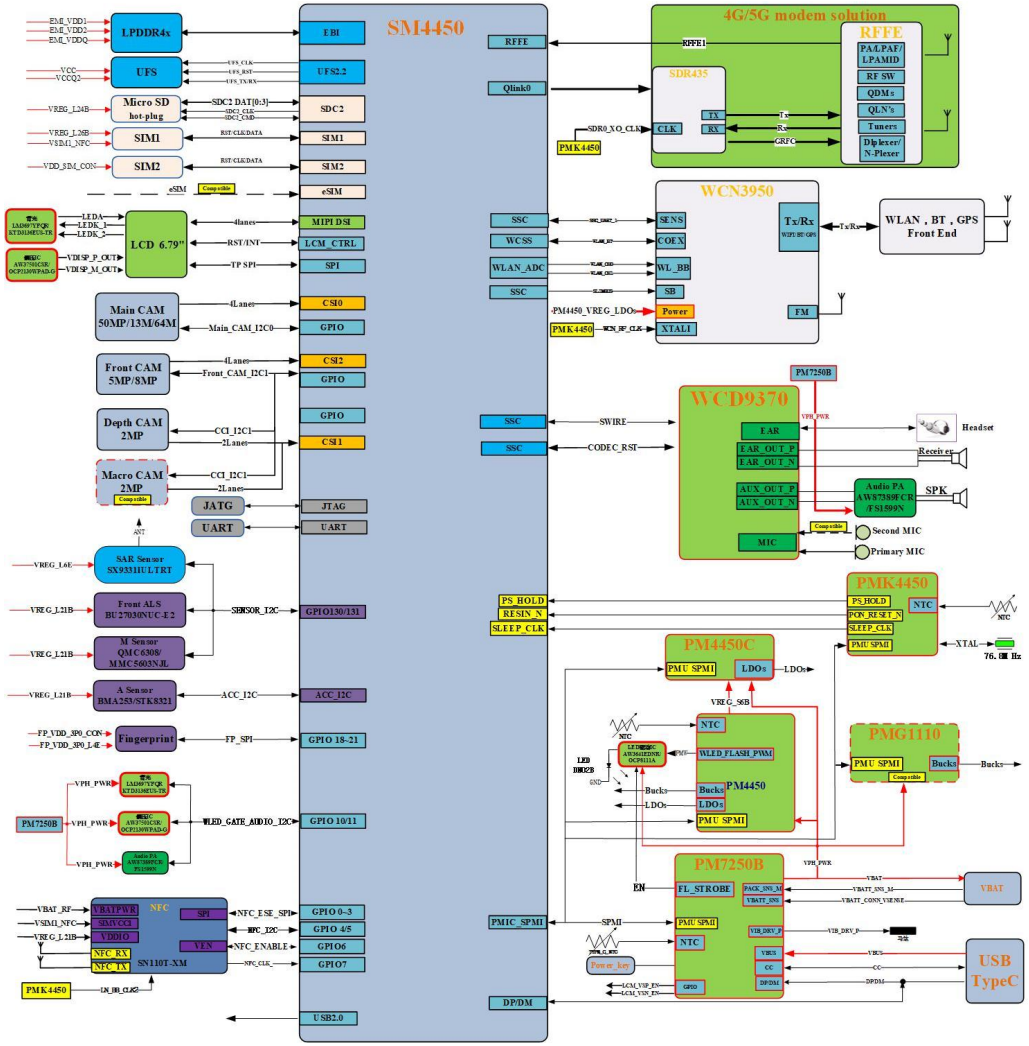

Title:	004_Block_Diagram		REV: V1.0
DOCUMENT NO.:	88029_1_12M14_20230417_1755		Size D
DEPARTMENT:	BB	DESIGNER:	ZHAOYUKUN
WINGTECH			
Date:	Monday, April 17, 2023	Sheet 4 of 59	

010_SM4450 CONTROL

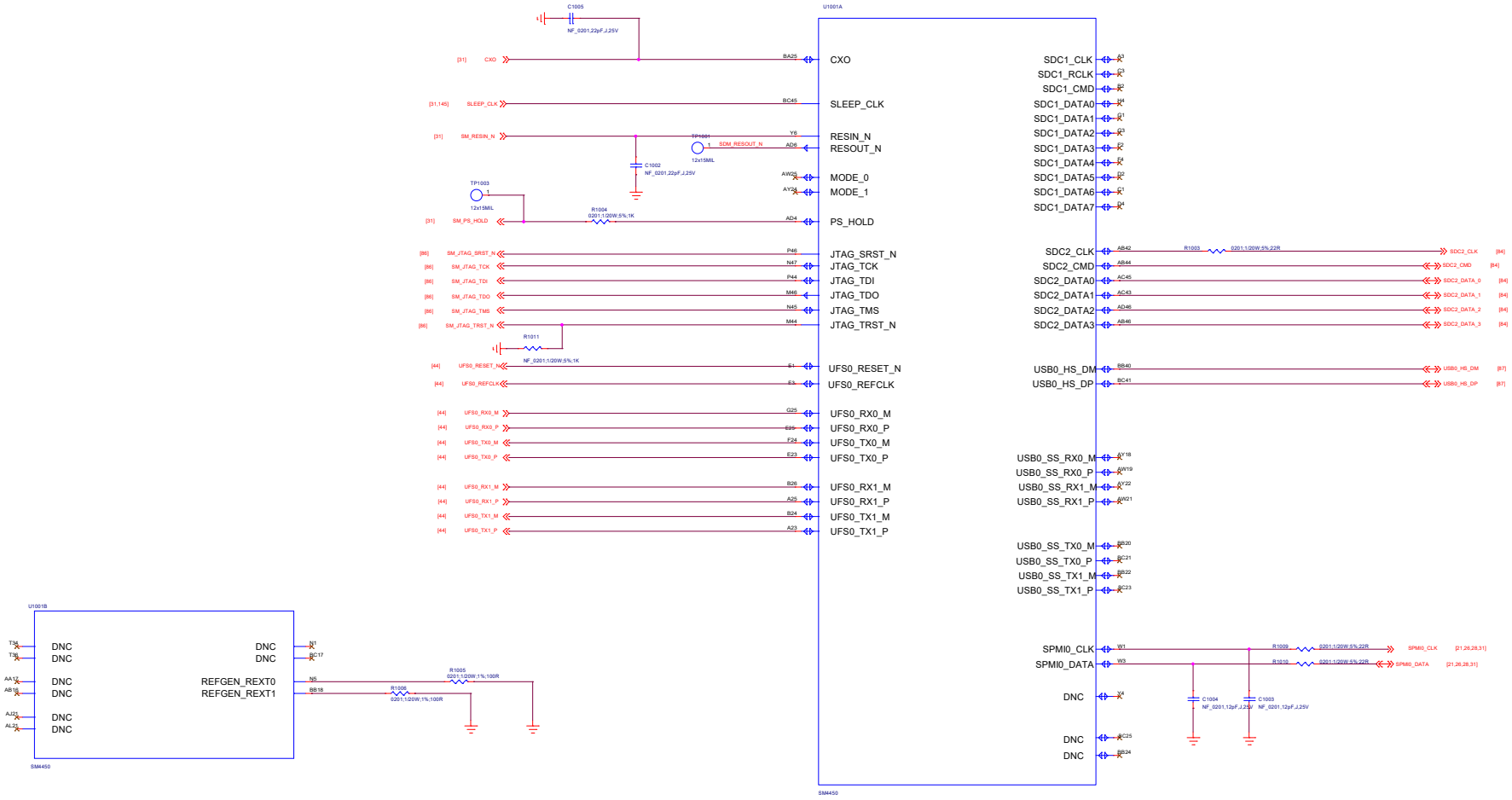

Title:	010_SM4450 CONTROL	REV:	V1.0
DOCUMENT NO.:	88029_1_12M14_20230417_1755	Size	D
DEPARTMENT:	BB	DESIGNER:	ZHAOYUKUN
WINGTECH			
Date:	Monday, April 17, 2023	Sheet 10 of 59	

011_SM4450 LPDDR4x

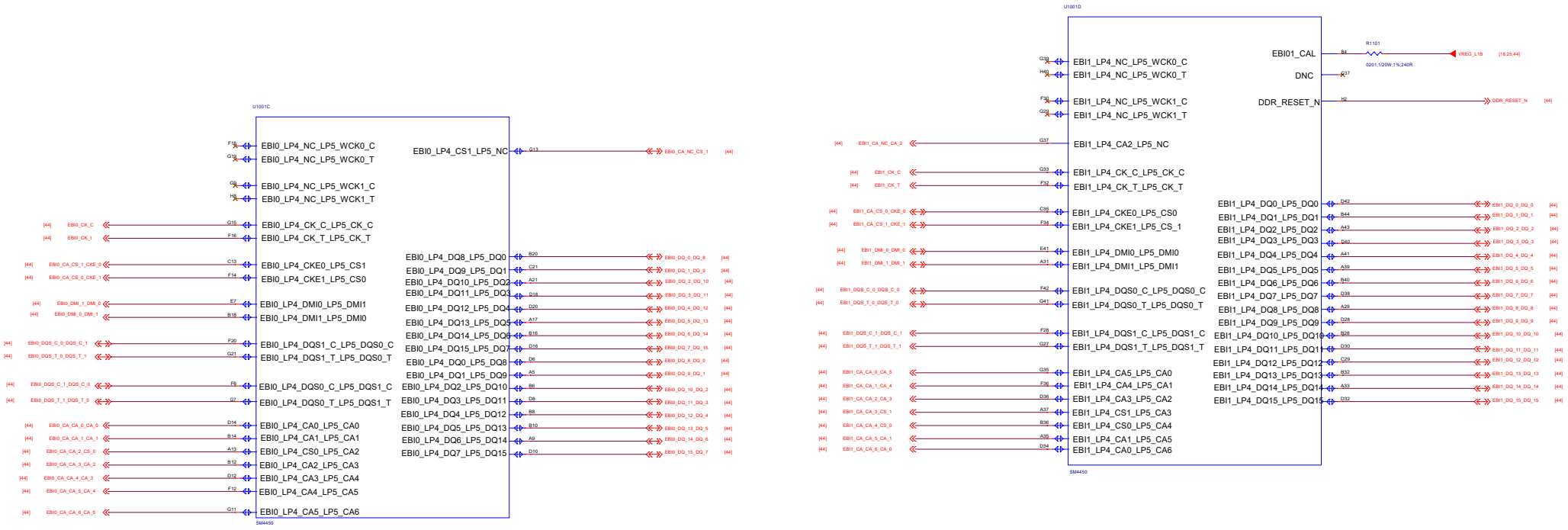

Title:	011_SM4450 LPDDR4x	REV:	V1.0
DOCUMENT NO.:	88029_1_12M14_20230417_1755	Size:	D
DEPARTMENT:	SB	DESIGNER:	ZHAOYUGUN
WINGTECH			
Date:	Monday, April 17, 2023	Sheet	11 of 59

012_SM4450 CSI_DSI

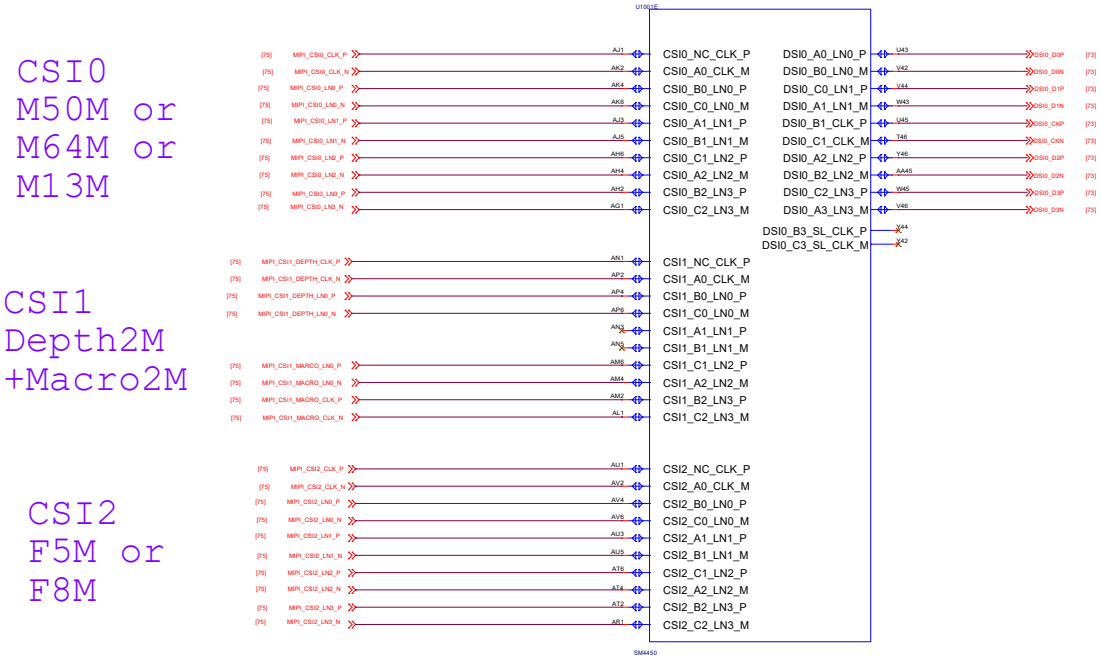

Title: 012_SM4450 CSI_DSI		REV: V1.0	
DOCUMENT NO.: 88029_1_12M14_20230417_1755		Size D	
DEPARTMENT: BB		DESIGNER: ZHAOYUKUN	
WINGTECH			
Date: Monday, April 17, 2023	Sheet 12 of 59		

013_SM4450_IQ_QLINK

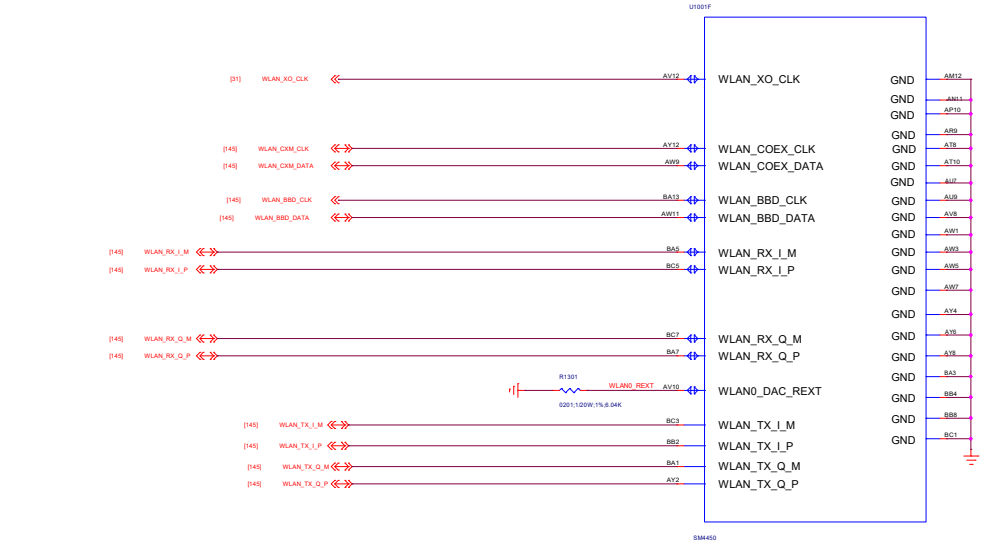

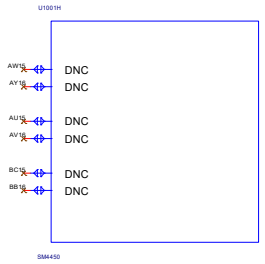

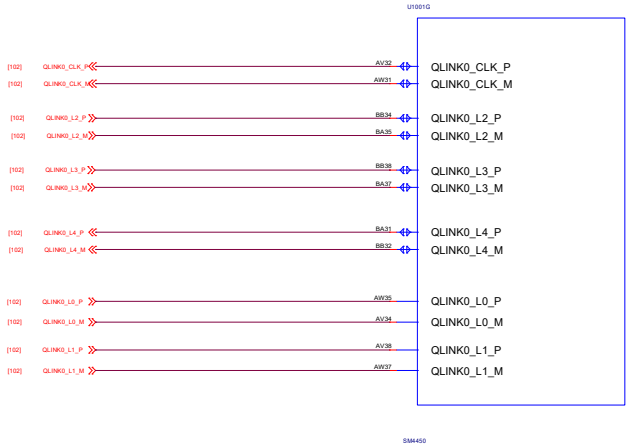

Title:	013_SM4450_IQ_QLINK	REV:	V1.0
DOCUMENT NO.:	88029_1_12M14_20230417_1755	Size	D
DEPARTMENT:	BB	DESIGNER:	ZHAOYUKUN
Date:	Monday, April 17, 2023	Sheet	13 of 59

014_SM4450_PULLUP_NTC

I2C BUS PULL-UPs

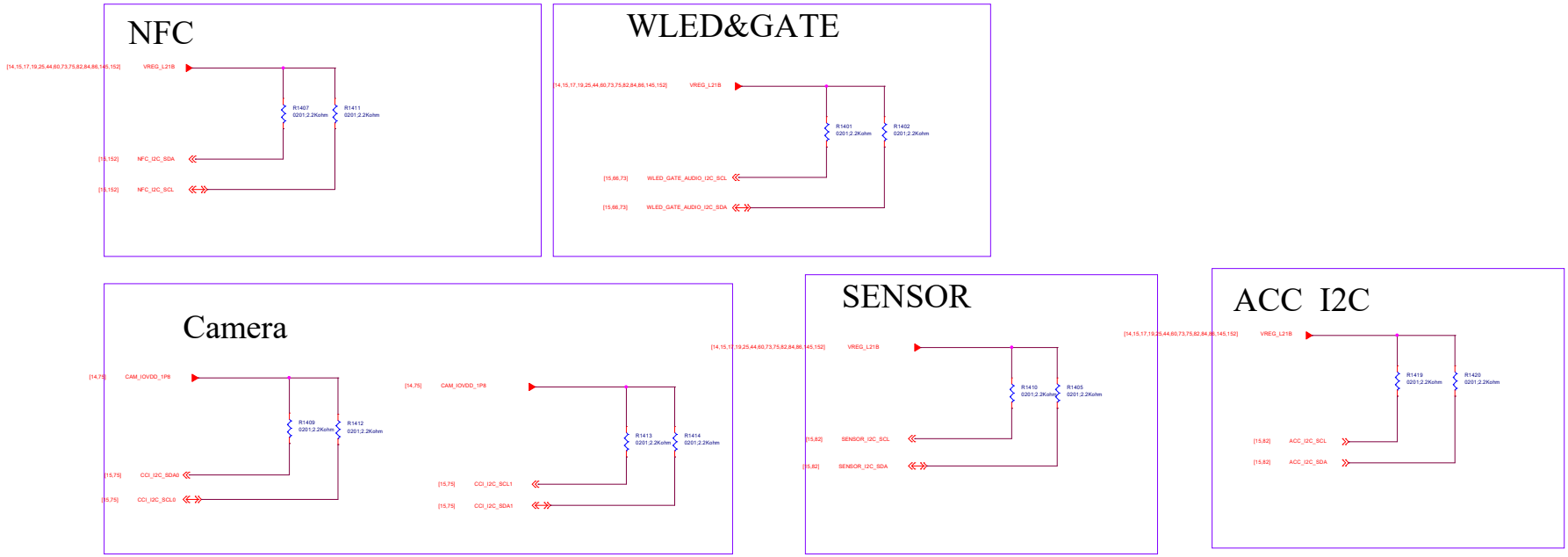

NTC

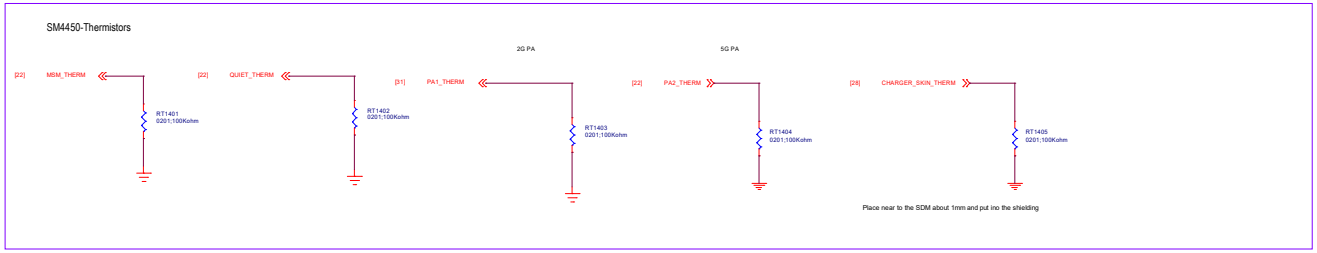

Title:	014_SM4450_PULLUP_NTC	REV:	V1.0
DOCUMENT NO.:	88029_1_12M14_20230417_1755	Size	D
DEPARTMENT:	BB	DESIGNER:	ZHAOYUKUN
Date:	Monday, April 17, 2023	Sheet	14 of 59

015_SM4450 GPIO

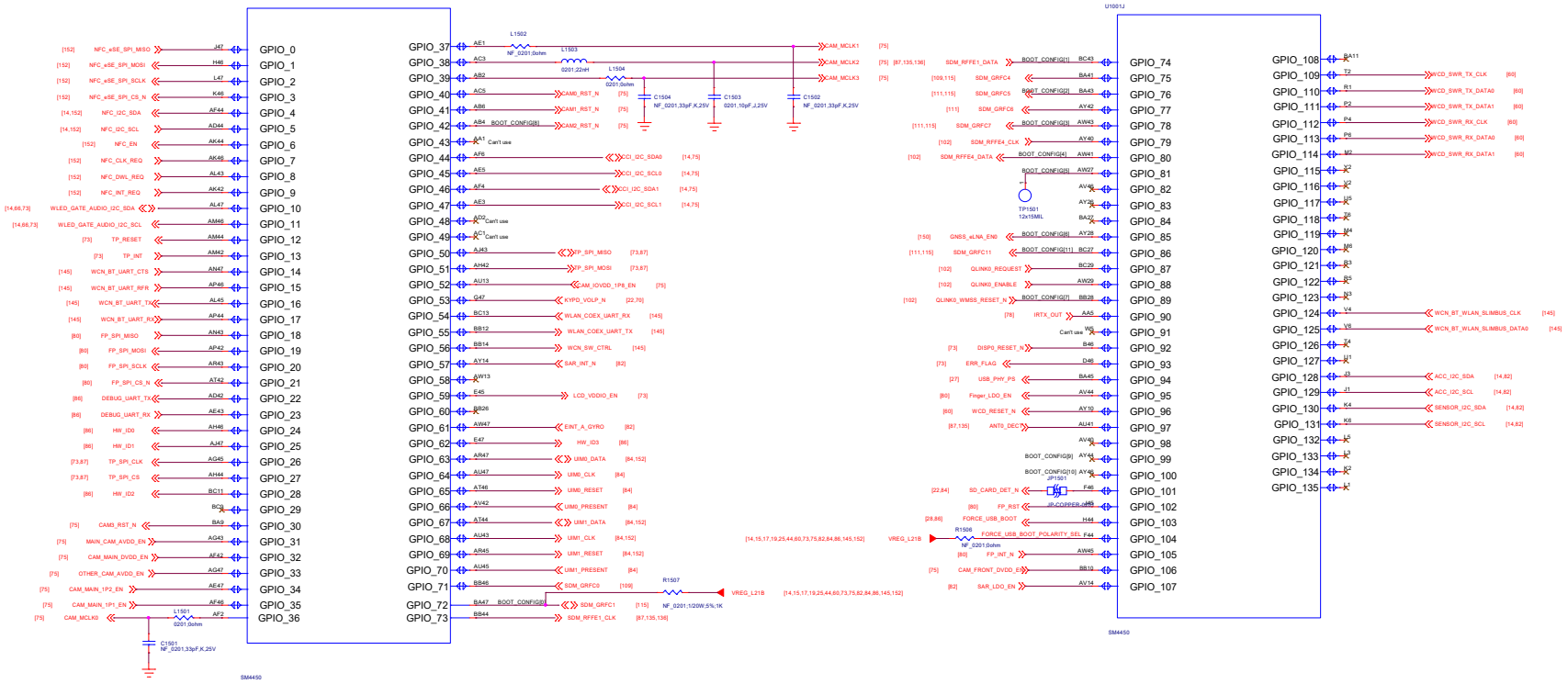

Title:	015_SM4450 GPIO	REV:	V1.0
DOCUMENT NO.:	88029_1_12M14_20230417_1755	Size	D
DEPARTMENT:	BB	DESIGNER:	ZHAOYUKUN
Date:	Monday, April 17, 2023	Sheet 15 of 59	

016_SM4450 PWR_0

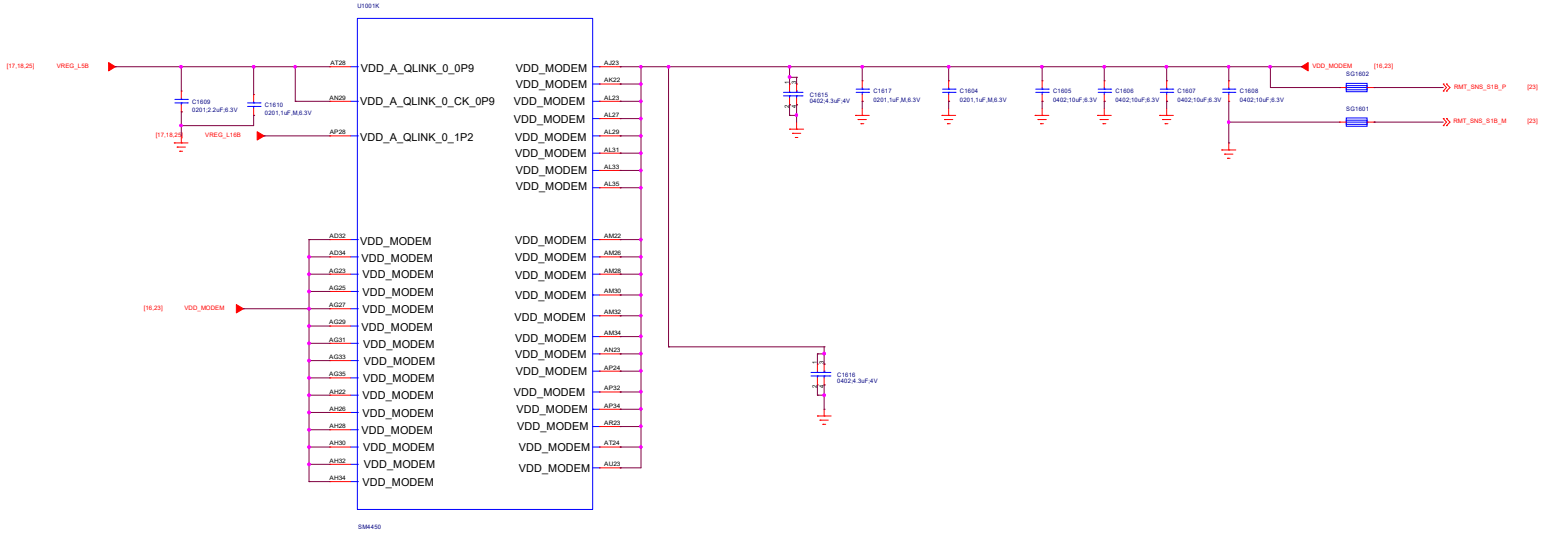

Title: 016_SM4450 PWR_0		REV: V1.0	
DOCUMENT NO.: 88029_1_12M14_20230417_1755		Size D	
DEPARTMENT: BB	DESIGNER: ZHAOYUKUN		
WINGTECH			
Date: Monday, April 17, 2023	Sheet 16 of 59		

017_SM4450_PWR_1

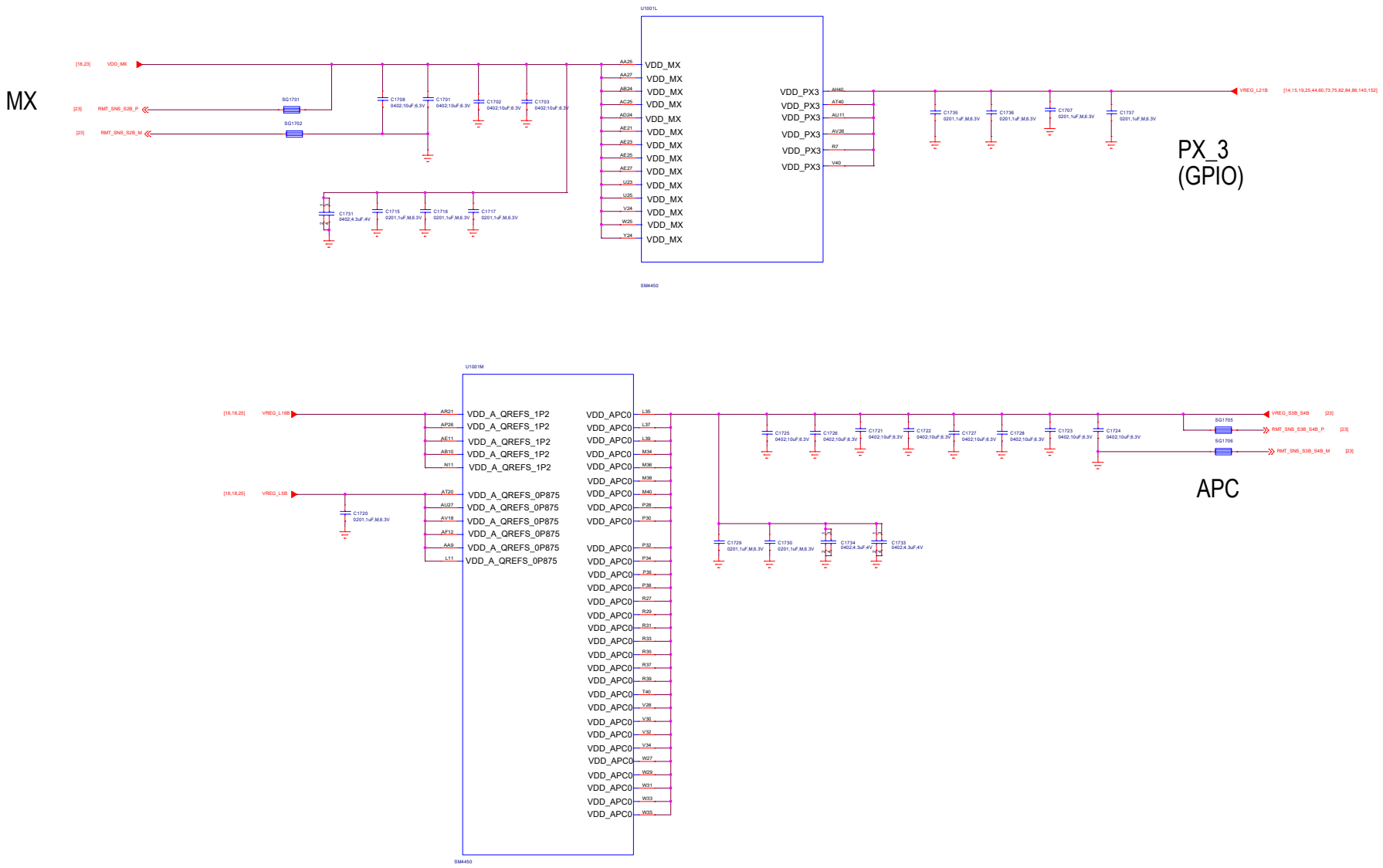

Title:	017_SM4450_PWR_1	REV:	V1.0
DOCUMENT NO.:	88029_1_12M14_20230417_1755	Size	D
DEPARTMENT:	BB	DESIGNER:	ZHAOYUKUN
Date:	Monday, April 17, 2023	Sheet	17 of 59

018_SM4450_PWR_2

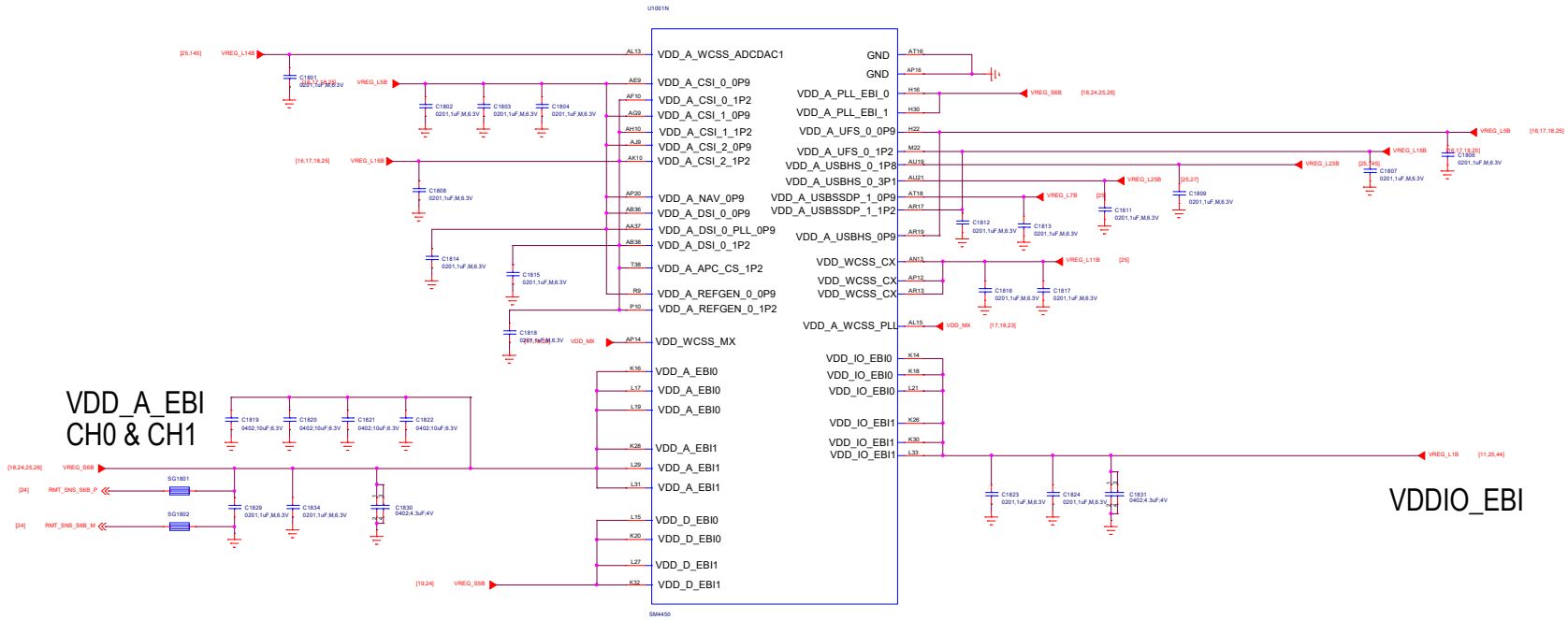

Title:	018_SM4450_PWR_2	REV:	V1.0
DOCUMENT NO.:	88020_1_12M14_20230417_1755	Size	D
DEPARTMENT:	BB	DESIGNER:	ZHAOYUKUN
WINGTECH			
Date:	Monday, April 17, 2023	Sheet	18 of 30

019_SM4450_PWR_3

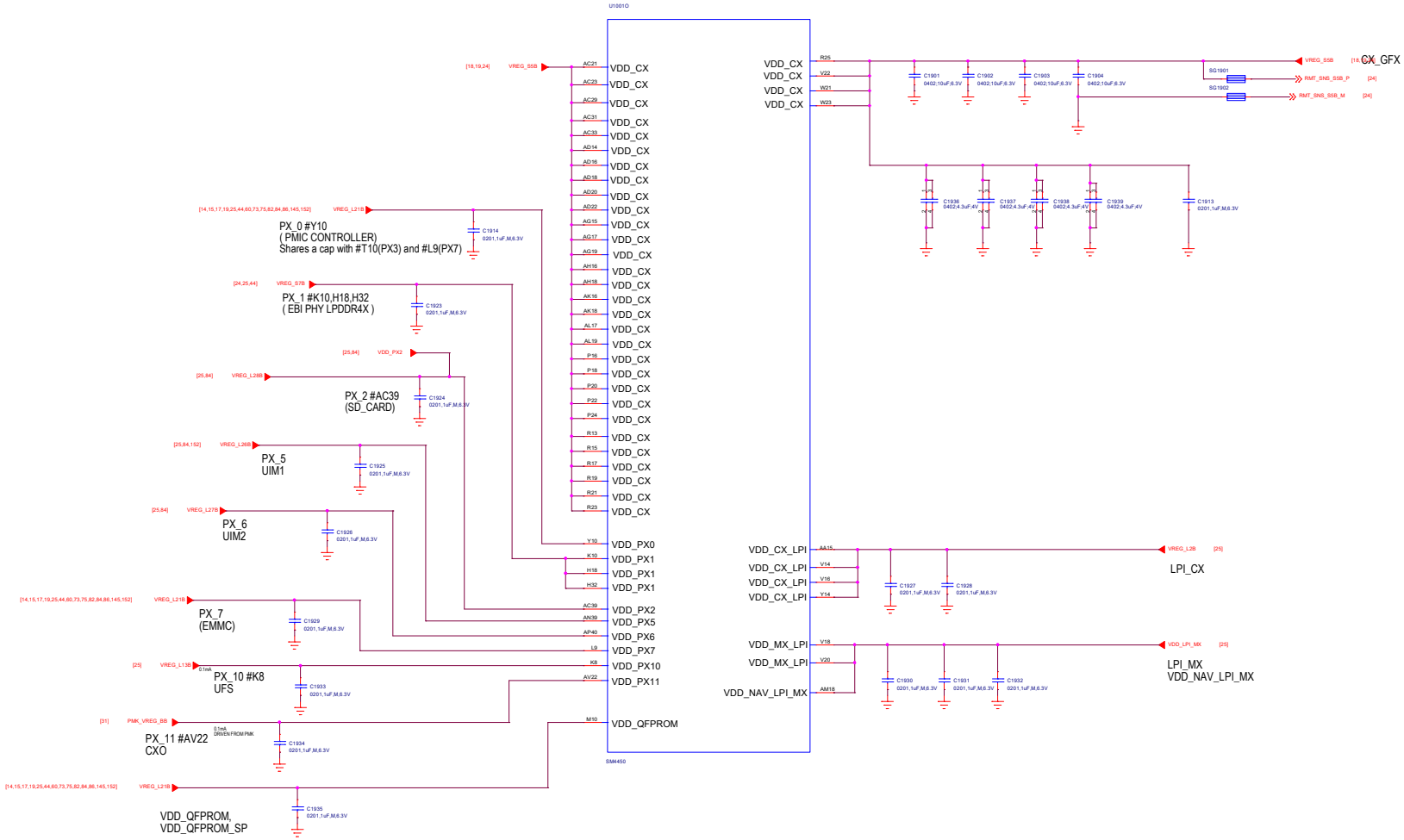

Title:	019_SM4450_PWR_3	REV:	V1.0
DOCUMENT NO.:	88020_1_12M14_20230417_1755	Size	D
DEPARTMENT:	BB	DESIGNER:	ZHAOYUKUN
Date:	Monday, April 17, 2023	Sheet	19 of 59

020_SM4450_GROUND

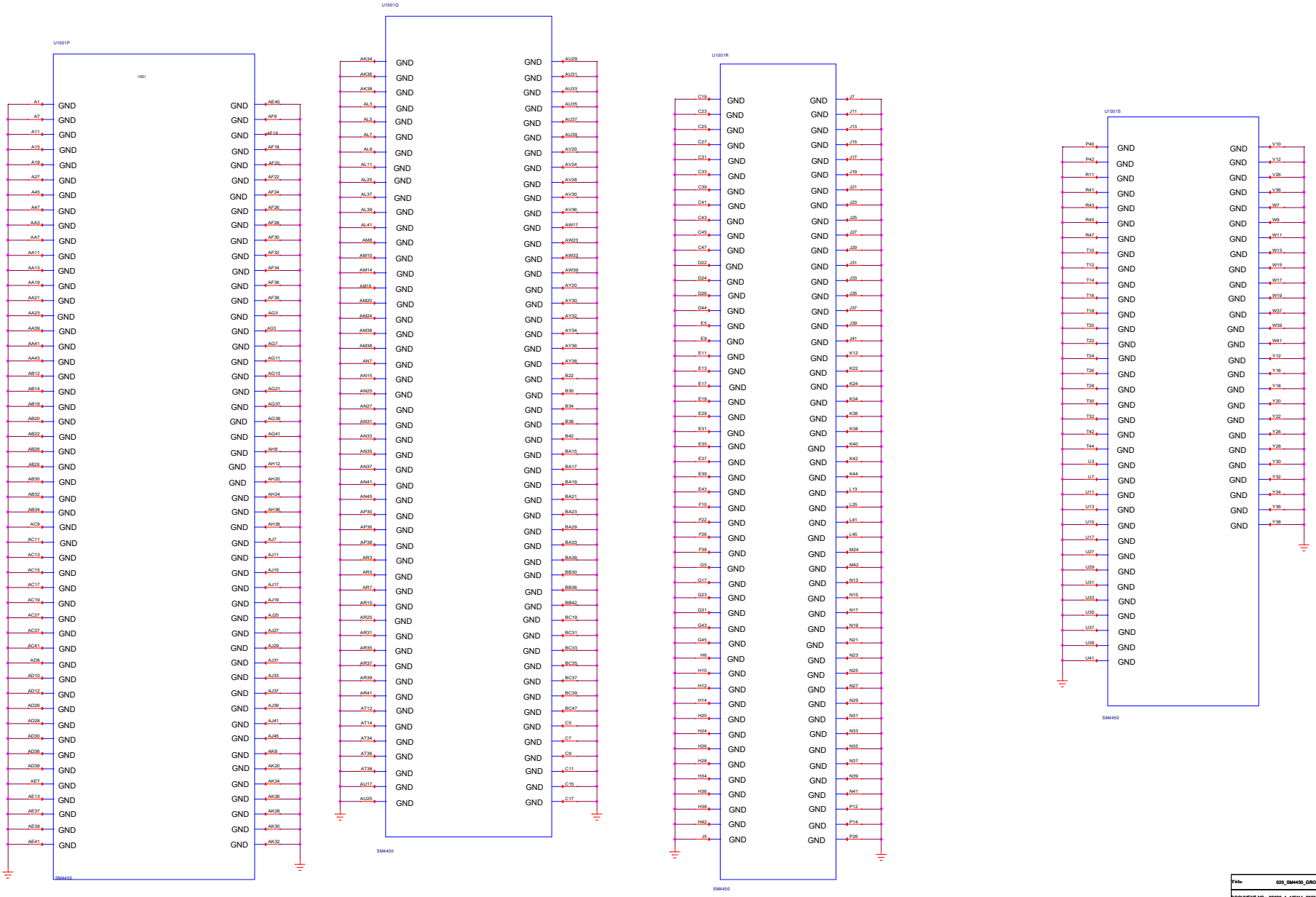

Title:	020_SM4450_GROUND	REV:	V1.0
DOCUMENT NO.:	88029_1_12M14_20230417_1755	Size:	D
DEPARTMENT:	BB	DESIGNER:	ZHAOYUKUN
WINGTECH			
Date:	Monday, April 17, 2023	Sheet	20 of 59

021_PM4450_HK/IO

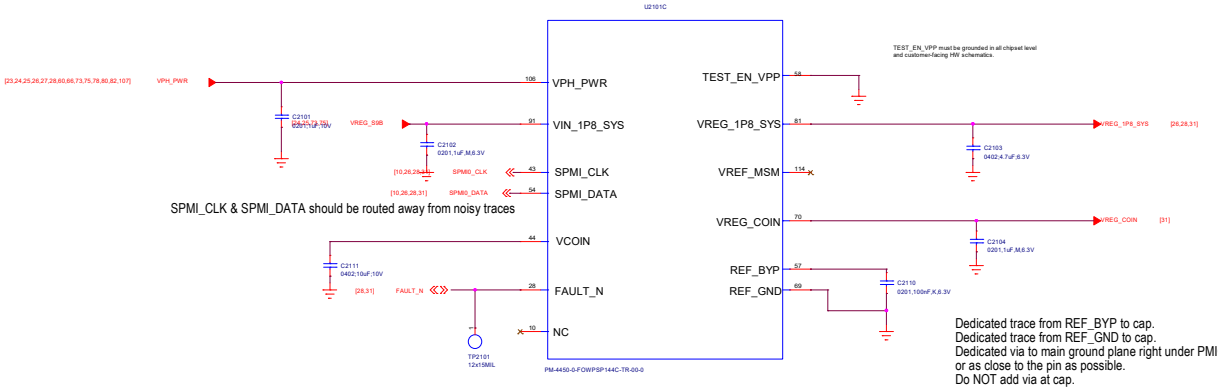

Dedicated trace from REF_BYP to cap.
Dedicated trace from REF_GND to cap.
Dedicated via to main ground plane right under PMIC pin (REF_GND) or as close to the pin as possible.
Do NOT add via at cap.

REF_BYP and REF_GND should be routed away from noisy traces

Title:	021_PM4450_HK/IO	REV:	V1.0
DOCUMENT NO.:	88029_1_12M14_20230417_1755	Size	D
DEPARTMENT:	BB	DESIGNER:	ZHAOYUKUN
WINGTECH			
Date:	Monday, April 17, 2023	Sheet	21 of 59

022_PM4450_GND_GPIO

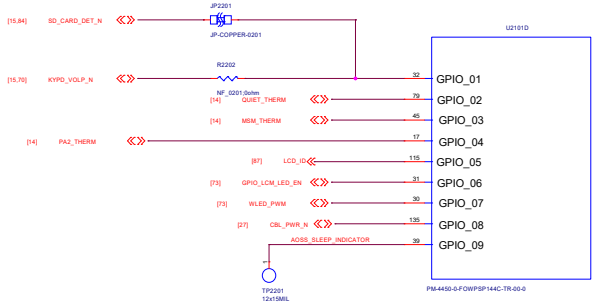

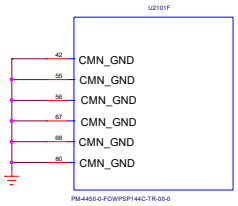

Title:	022_PM4450_GND_GPIO	REV:	V1.0
DOCUMENT NO.:	88029_1_12M14_20230417_1755	Size	D
DEPARTMENT:	BB	DESIGNER:	ZHAOYUKUN
WINGTECH			
Date:	Monday, April 17, 2023	Sheet	22 of 30

023_PM4450_VREG_S1_S4

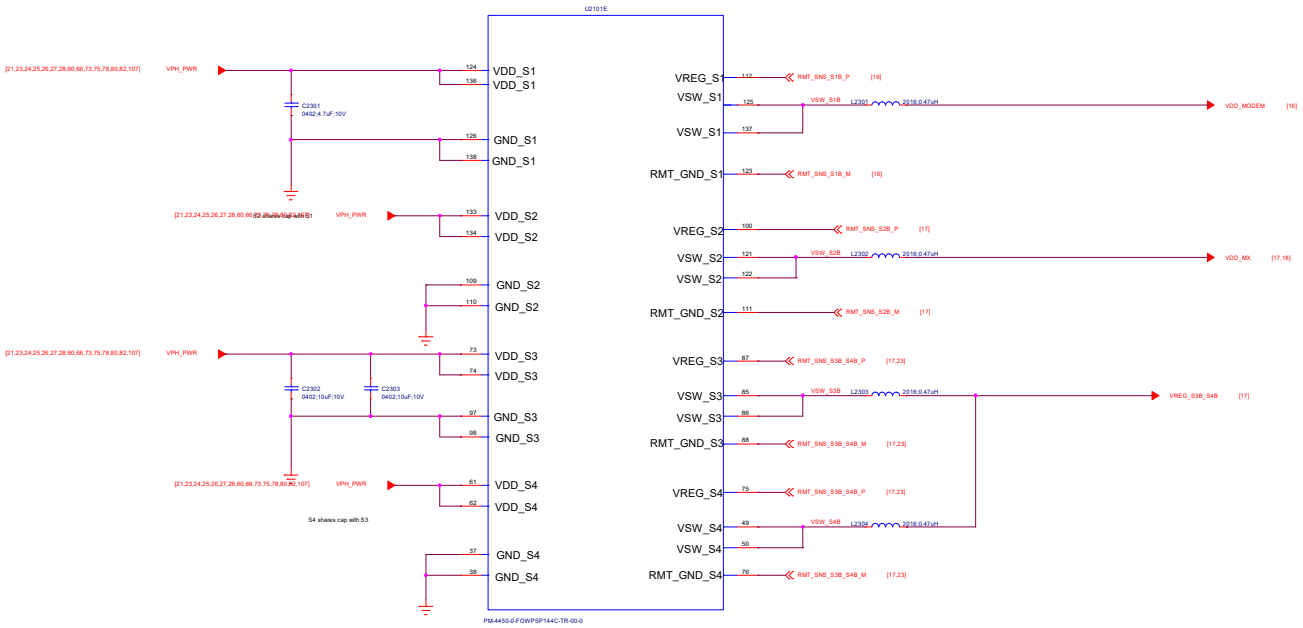

The Buck feedback lines must e shorted under the PMIC for multi-phase bucks.
The reference layout will not have this short under the PMIC; a generic breakout.

Title: 023_PM4450_VREG_S1_S4		REV: V1.0
DOCUMENT NO.: 88029_1_12M14_20230417_1755		Size D
DEPARTMENT: BB	DESIGNER: ZHAOYUKUN	
WINGTECH		
Date: Monday, April 17, 2023	Sheet 23 of 59	

024_PM4450_VREG_S5_S9

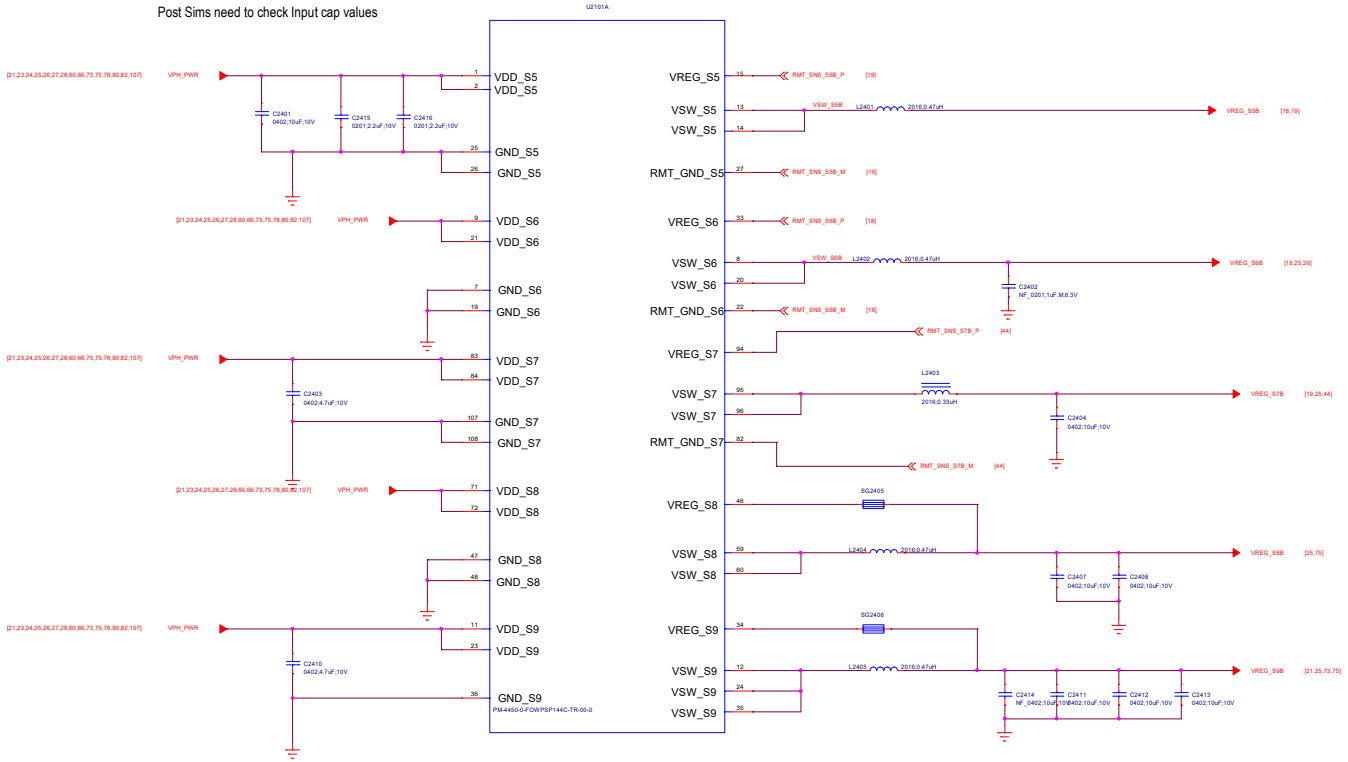

Title: 024_PM4450_VREG_S5_S9		REV: V1.0
DOCUMENT NO.: 88029_1_12M14_20230417_1755		Size D
DEPARTMENT: BB	DESIGNER: ZHAOYUKUN	
WINGTECH		
Date: Monday, April 17, 2023	Sheet 24 of 59	

025_ PM4450_VREG_LDOs

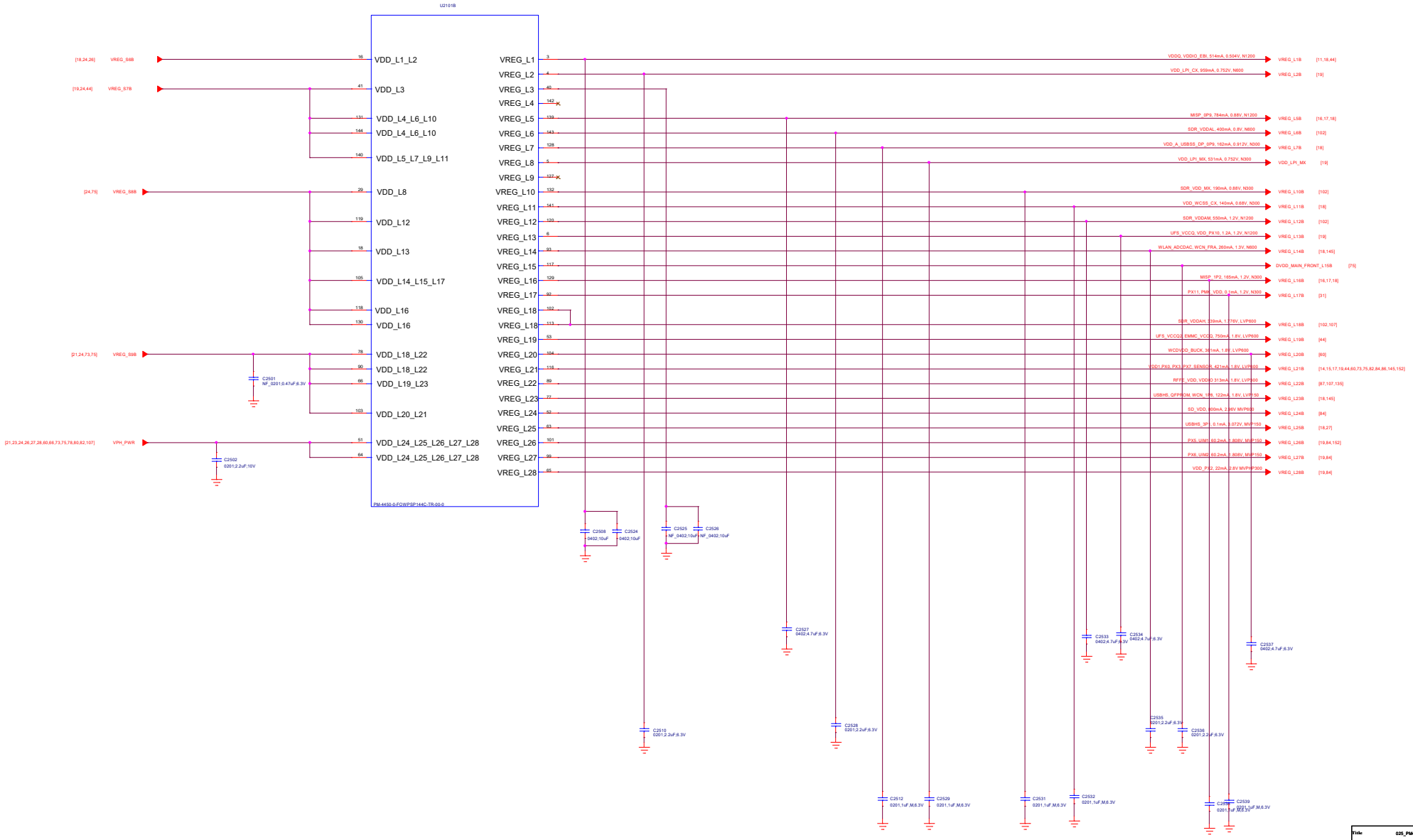

Title: 025_PM4450_VREG_LDOs		REV: V1.0	
DOCUMENT NO.: 88020_1_12M14_20230417_1755		Size D	
DEPARTMENT: BB	DESIGNER: ZHAOYUKUN		
WINGTECH			
Date: Monday, April 17, 2023	Sheet 25 of 59		

026_PM4450C

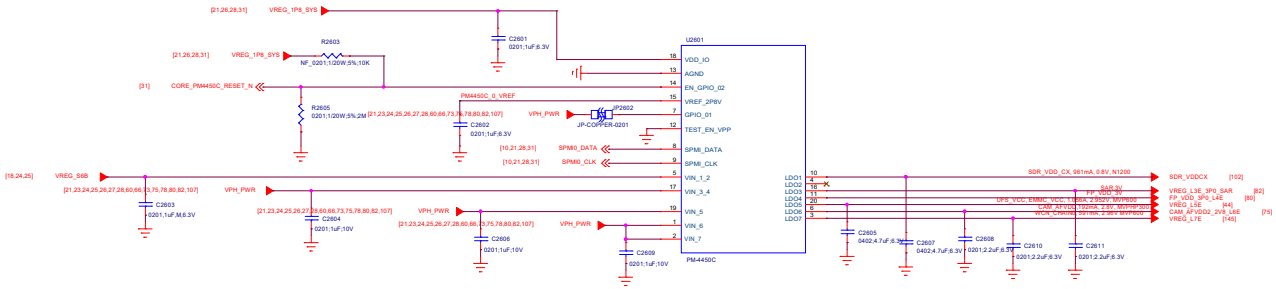

Title:	026_PM4450C	REV:	V1.0
DOCUMENT NO.:	88029_1_12M14_20230417_1755	Size	D
DEPARTMENT:	BB	DESIGNER:	ZHAOYUKUN
WINGTECH			
Date:	Monday, April 17, 2023	Sheet	26 of 59

027_PMIC_PM7250B_TIOMAN: CHARGE

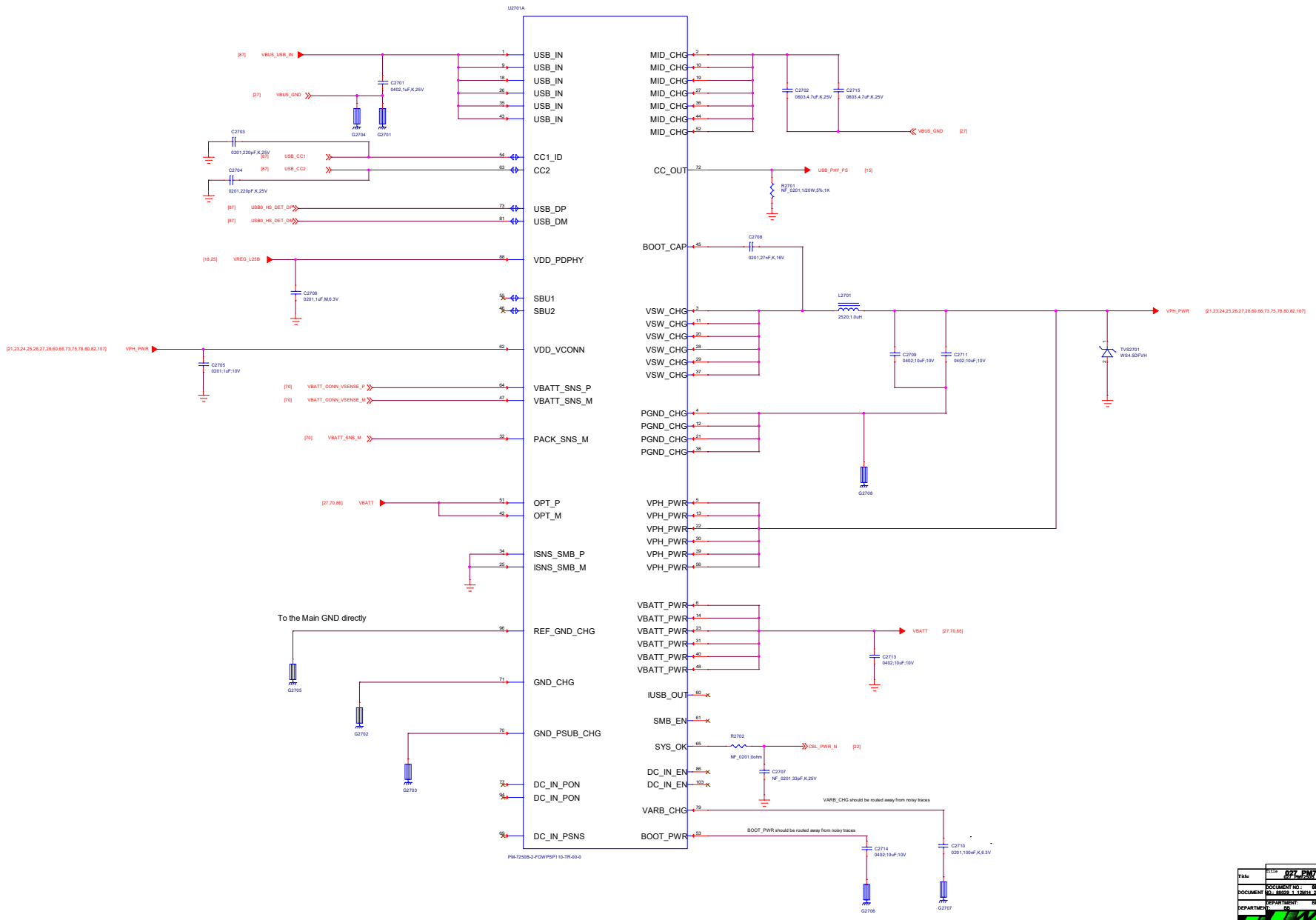

Title	027_PMIC_PM7250B_TIOMAN: CHARGE		
DOCUMENT	DOCUMENT NO.: 88029_1_1_15814_0023541T_0765	Size: D	
DEPARTMENT	DEPARTMENT: SB	DESIGNER: ZHAO/JIAJUN	
	WINGTECH		
Date:	Monday, April 17, 2023	Sheet 27 of 32	156

028_PMIC_PM7250B_TIOMAN: MISC/GPIO/GNDE

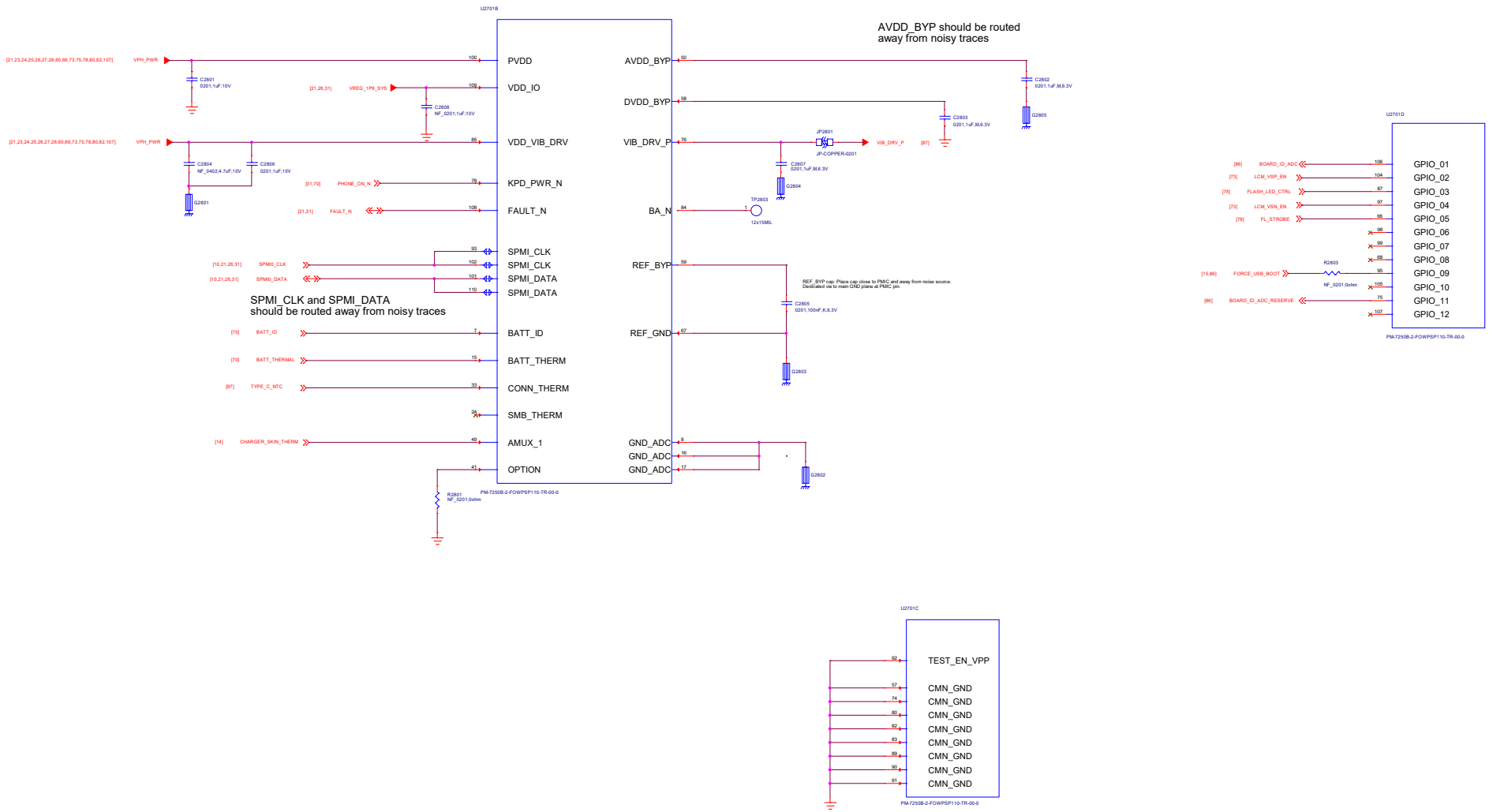

Title	028_PM7250B_TIOMAN: MISC/GPIO/G	REV: V1.0	
DOCUMENT	DOCUMENT NO.: 88029_1_12814_20230417_1705	Size: D	
DEPARTMENT	DEPARTMENT: BB / DESIGNER: ZHAO YUN		
Date:	Monday, April 17, 2023	Sheet 28 of 32	158

031_PMK4450

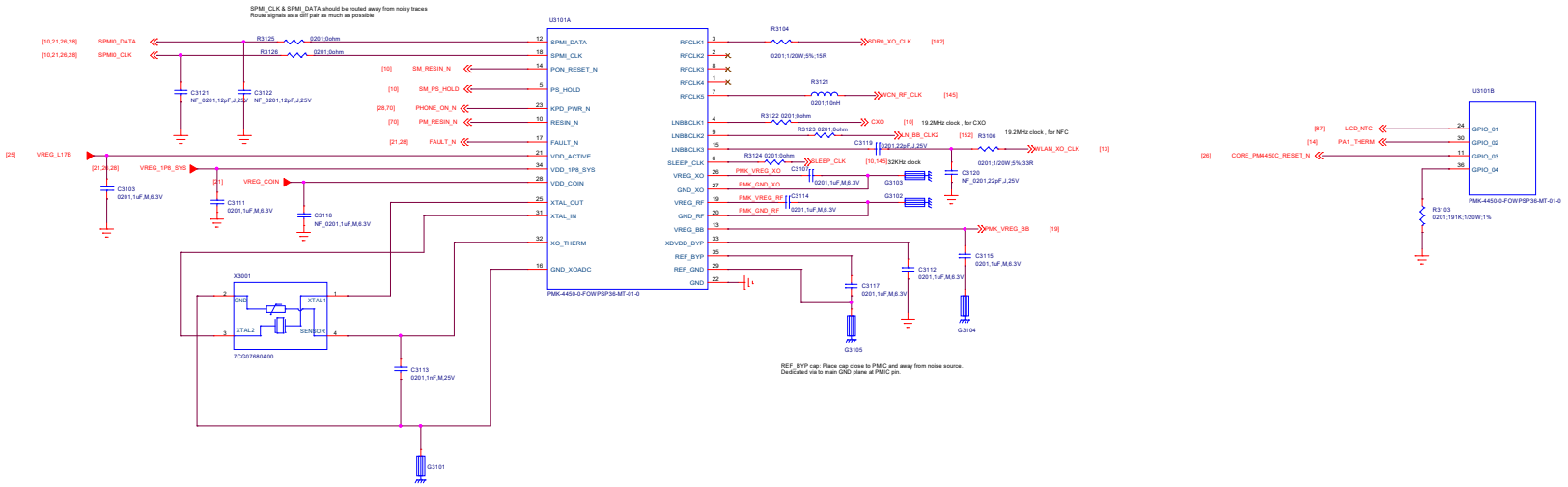

Title:	031_PMK4450	REV:	V1.0
DOCUMENT NO.:	88020_1_12M14_20230417_1755	Size	D
DEPARTMENT:	BB	DESIGNER:	ZHAOYUKUN
WINGTECH			
Date:	Monday, April 17, 2023	Sheet 31 of 59	

044_UFS_DDR

UFS2.2

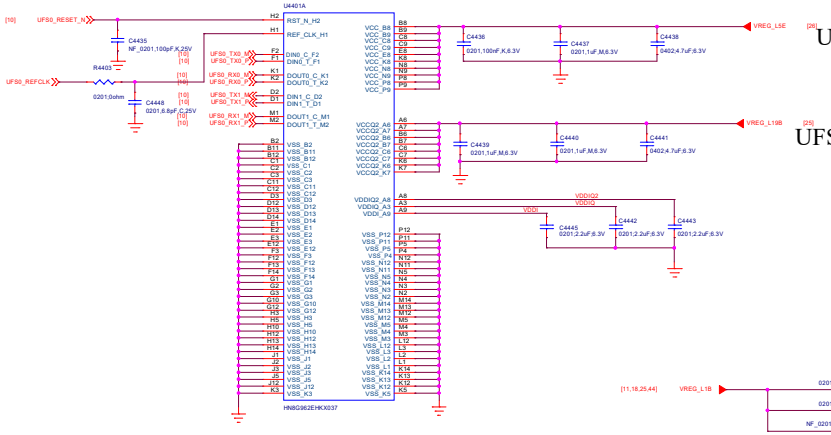

LPDDR4X

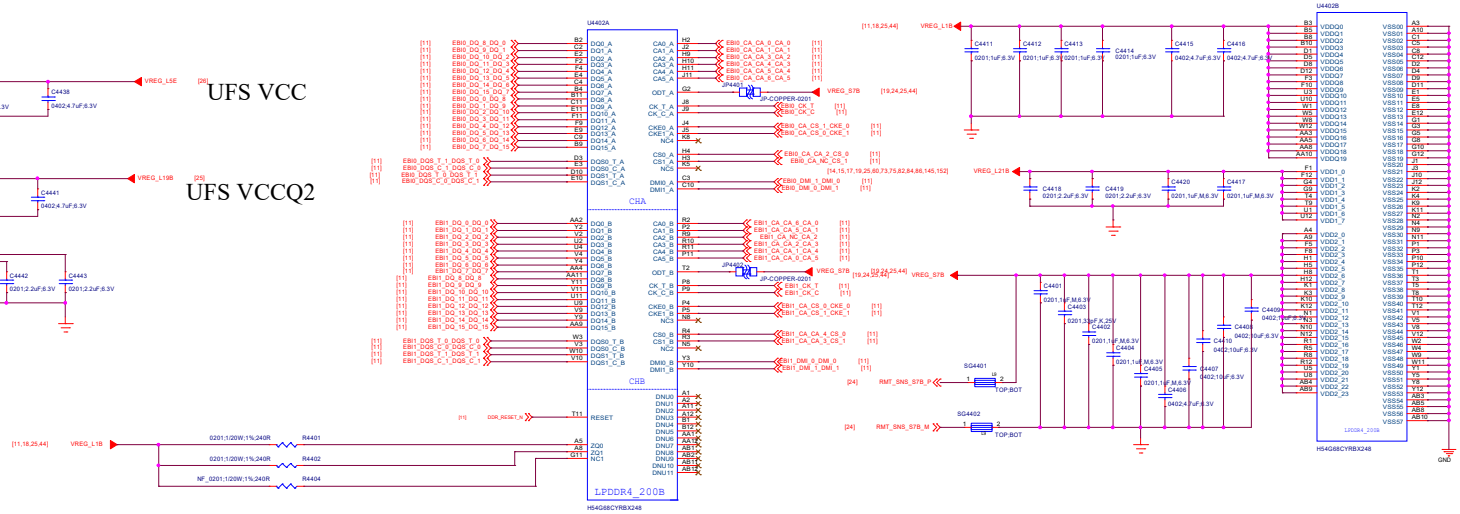

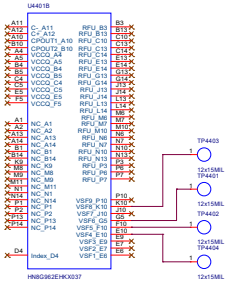

		M19	位号 / 型号	VDDI-C4445	VDDIQ-C4442	VDDIQ2-C4443
64GB	一供	Hynix	HN8G962EHKX037	2.2uf	2.2uf	2.2uf
	二供	宏芯宇	CBE06-64G0CHAC	2.2uf	2.2uf	2.2uf
128GB	一供	Hynix	HN8T062EHKX039	2.2uf	2.2uf	2.2uf
	二供	宏芯宇	CBE06-1280CHAC	2.2uf	2.2uf	2.2uf
256G	独供	Hynix	HN8T162EHKX041	2.2uf	2.2uf	2.2uf

060_WCD9370

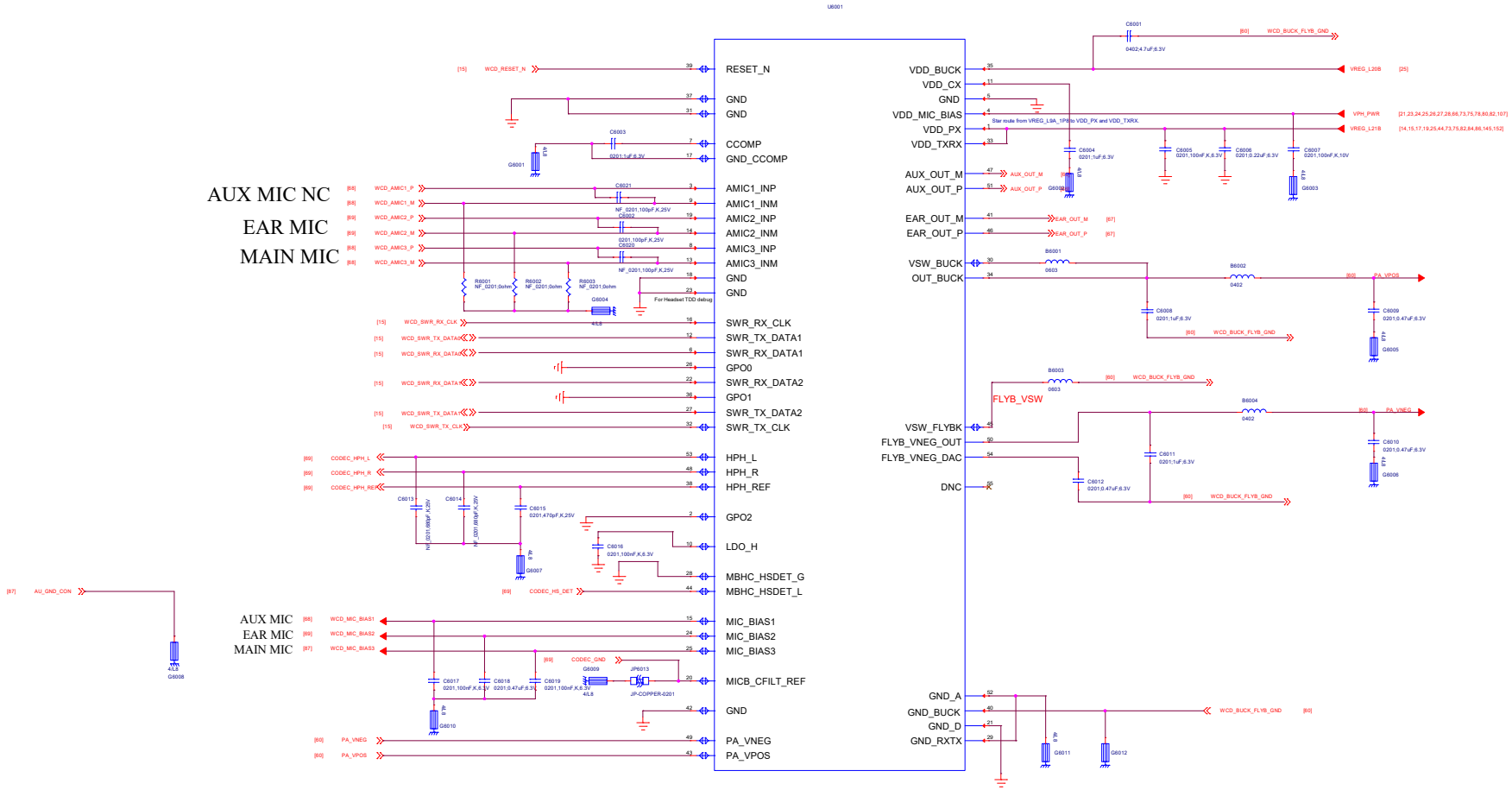

NOTE:B6001-B6004 Can't change to other PN.Otherwise will cause receiver TDD issue.

Title:	060_WCD9370	REV:	V1.0
DOCUMENT NO.:	88029_1_12M14_20230417_1755	Size	D
DEPARTMENT:	BB	DESIGNER:	ZHAOYUKUN
WINGTECH			
Date:	Monday, April 17, 2023	Sheet	60 of 59

AUDIO_CODEC_WCD9370

066_SPK

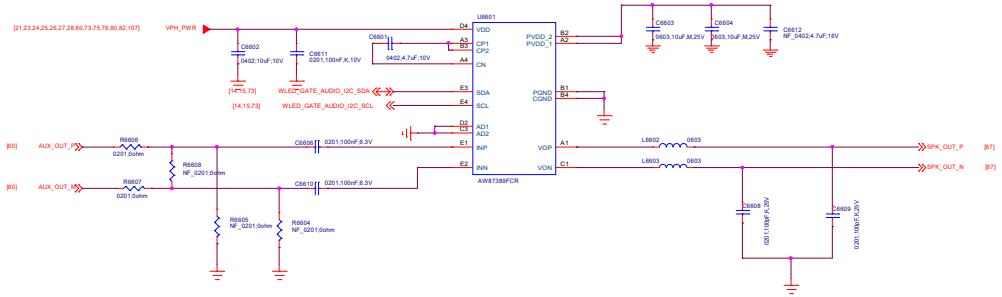

Title	066_SPK	SZV:	V1.0
DOCUMENT NO.:	88629_1_12M14_20230417_1755	Size	D
DEPARTMENT: 8B		DESIGNER:	ZHAOYUKUN
WINGTECH			
Date: Monday, April 17, 2023		Sheet 66 of 66	

067_Receiver

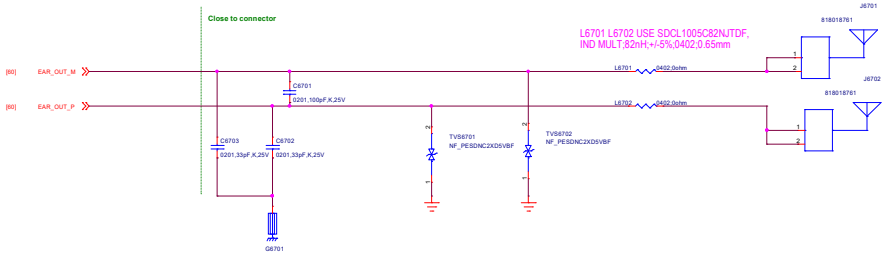

Title:	067_Receiver	REV:	V1.0
DOCUMENT NO.:	88029_1_12M14_20230417_1755	Size	D
DEPARTMENT:	BB	DESIGNER:	ZHAOYUKUN
WINGTECH			
Date:	Monday, April 17, 2023	Sheet	67 of 59

068_MIC

MAIN MIC

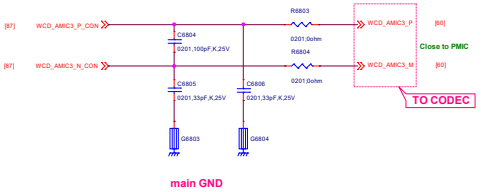

RFI兼容设计

Second MIC

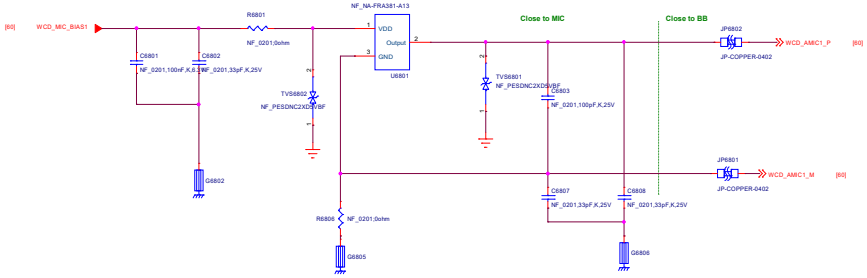

Title:	068_MIC	REV:	V1.0
DOCUMENT NO.:	88029_1_12M14_20230417_1755	Size	D
DEPARTMENT:	BB	DESIGNER:	ZHAOYUKUN
WINGTECH			
Date:	Monday, April 17, 2023	Sheet	68 of 59

069_EARPHONE

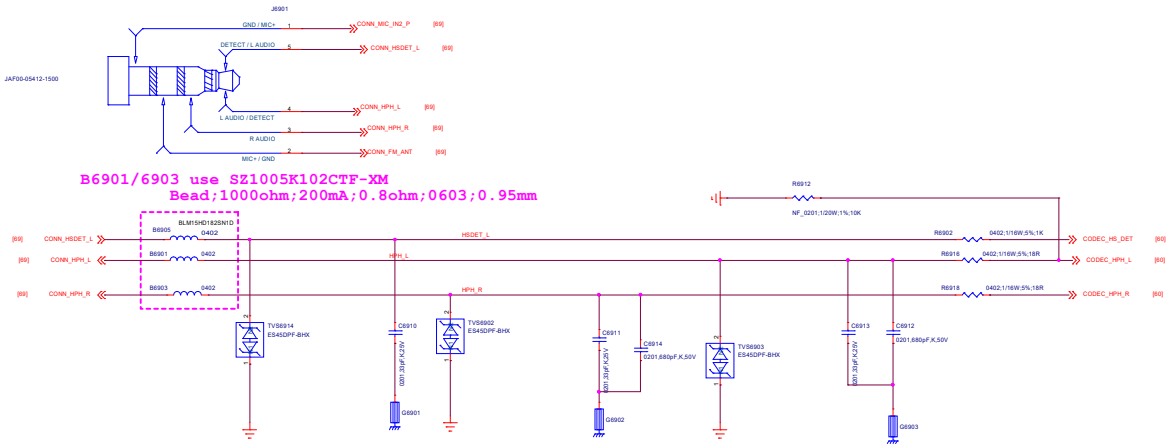

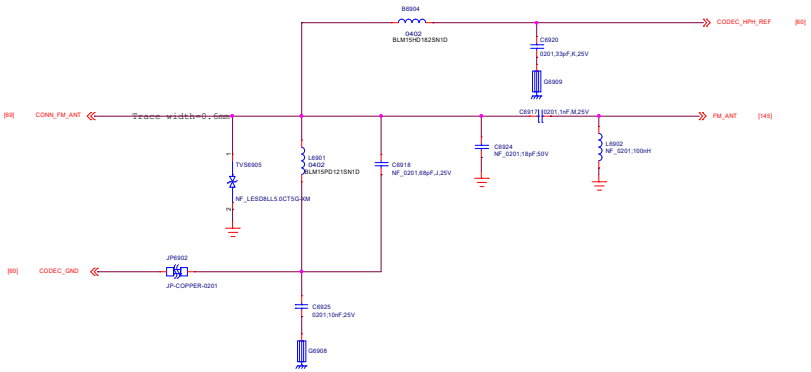

Earphone Microphone

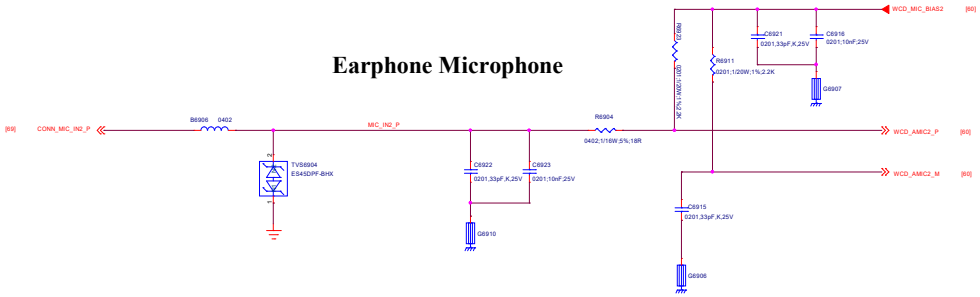

Title:	069_EARPHONE	REV:	V1.0
DOCUMENT NO.:	88029_1_12M14_20230417_1755	Size	D
DEPARTMENT:	BB	DESIGNER:	ZHAOYUKUN
WINGTECH			
Date:	Monday, April 17, 2023	Sheet	69 of 59

070_Battery/Sidekey

BATTERY CONNECTOR

BATTERY MASTER CONNECTOR

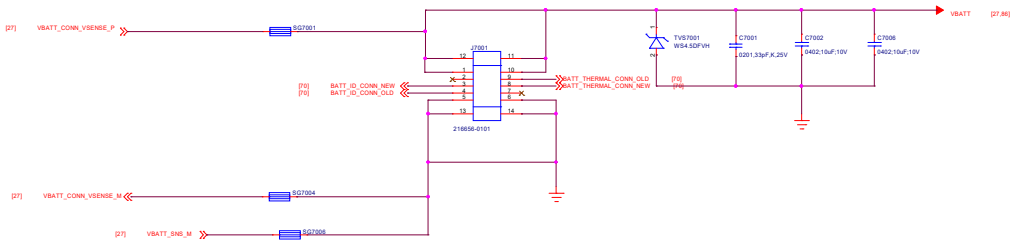

BATTERY ID&THERMAL

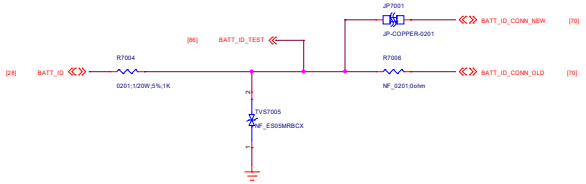

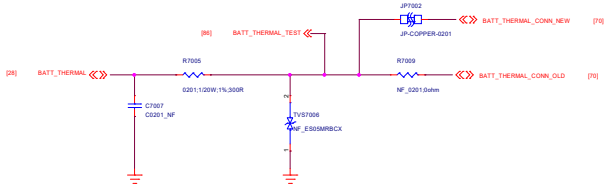

Power Key / Key Pad

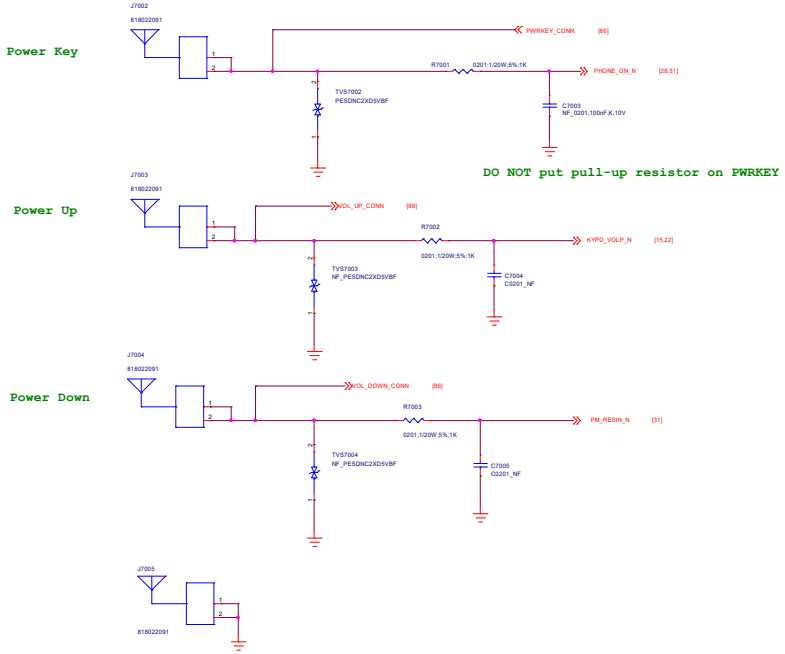

Title:	070_Battery/Sidekey	REV:	V1.0
DOCUMENT NO.:	88029_1_12M14_20230417_1755	Size	D
DEPARTMENT:	BB	DESIGNER:	ZHAOYUKUN
WINGTECH			
Date:	Monday, April 17, 2023	Sheet	70 of 59

072_LCD/CTP IF

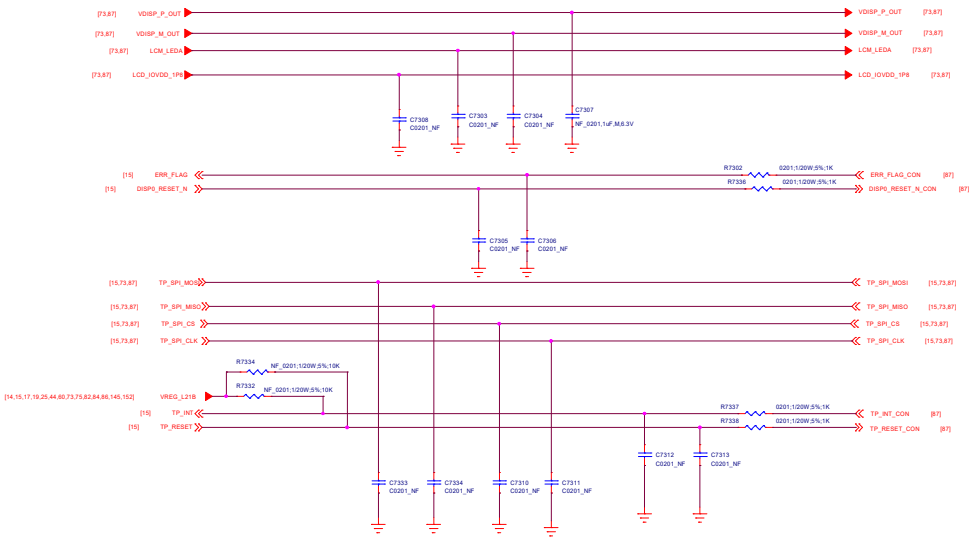

LCD DSI

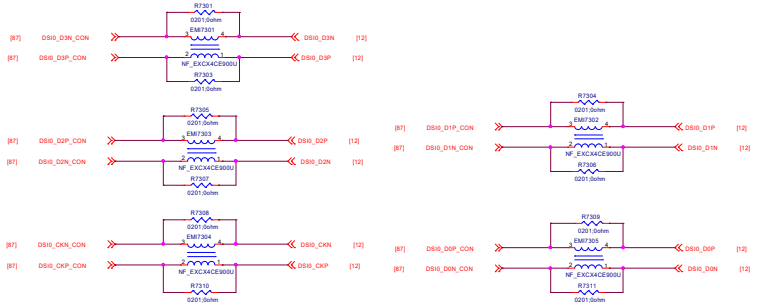

LCD LDO 1P8

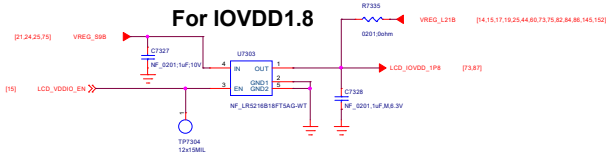

LCD-BACKLIGHT

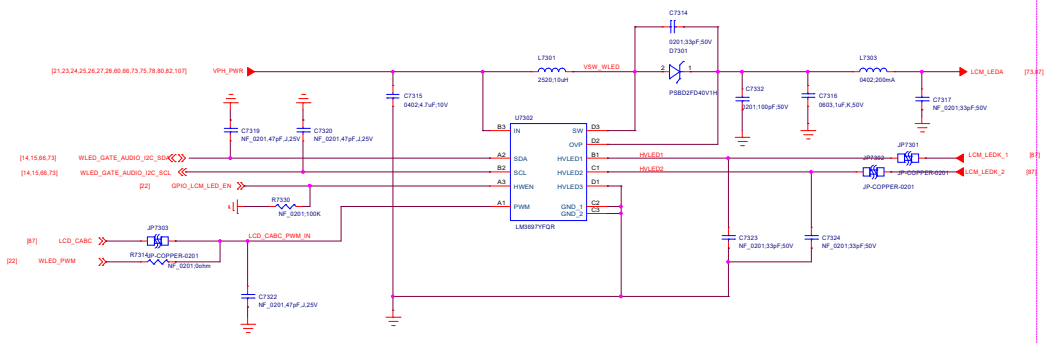

LCD Gate Drive

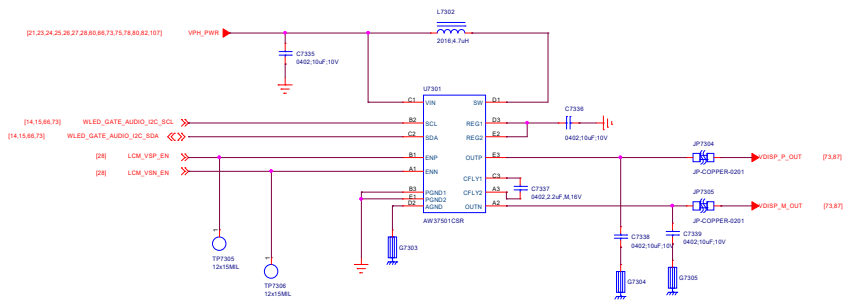

Title:	072_LCD/CTP IF	REV:	V1.0
DOCUMENT NO.:	88029_1_12M14_20230417_1755	Size	D
DEPARTMENT:	BB	DESIGNER:	ZHAOYUKUN
Date:	Monday, April 17, 2023	Sheet	73 of 59

075_CAMERA IF

Main Camera 50MP, （or 13M or 64M）

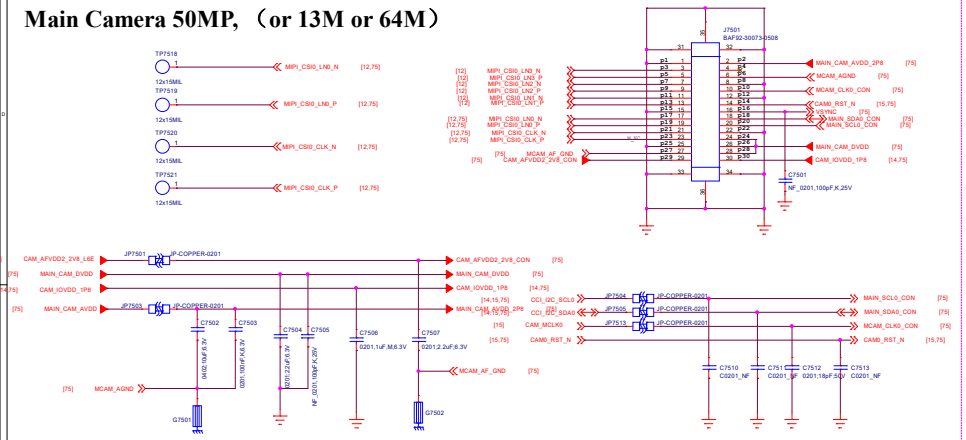

Front Camera 16M

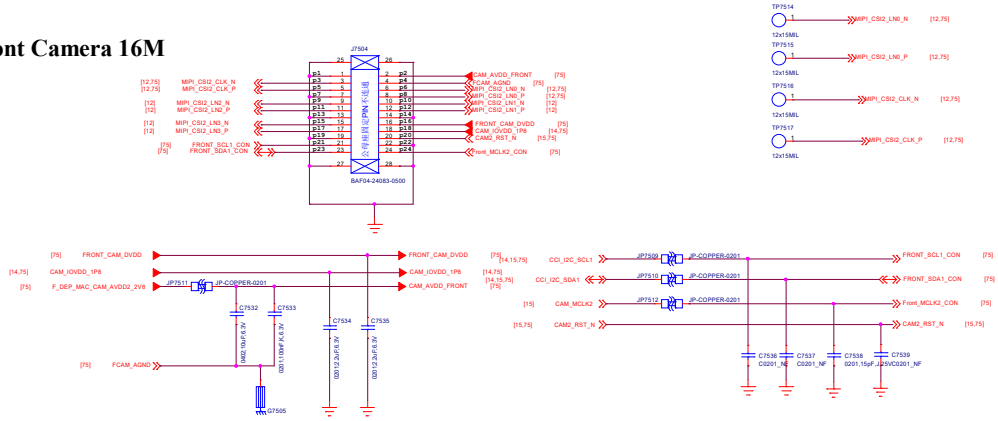

Macro Camera 2M

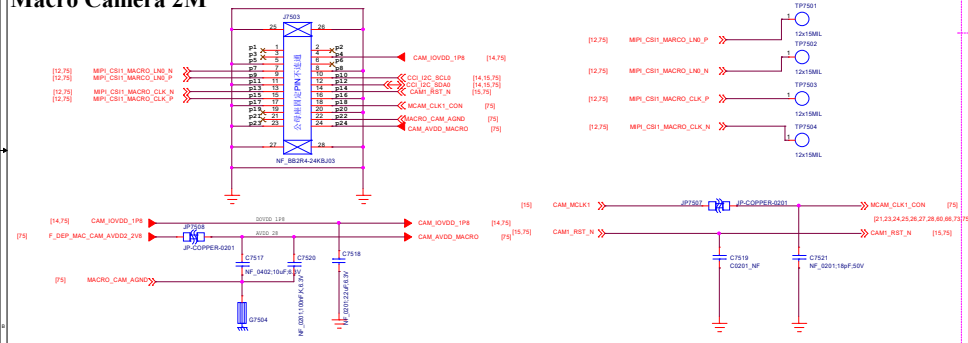

Camera Ext Power

Front Cam DVDD 1.2V

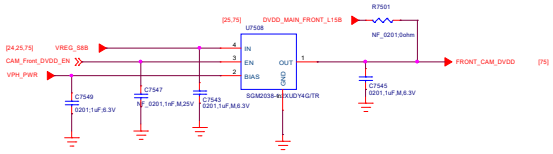

Main CAM AVDD 2.8V

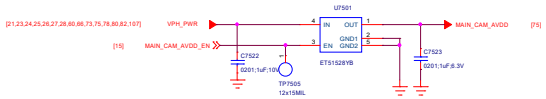

Front/Macro/Depth CAM AVDD2 2.8V

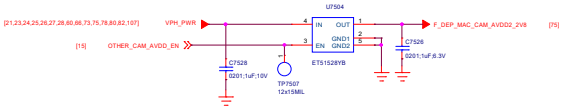

Main CAM DVDD 1.05/1.1/1.2

50M---1.05/1.2
13M---1.1
64M---1.05

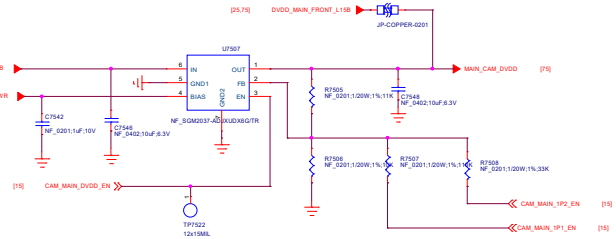

ALL CAM IOVDD 1.8

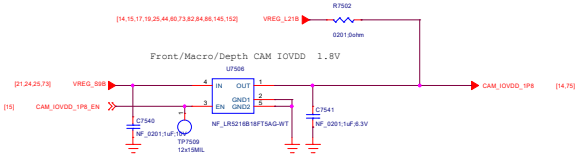

Depth Camera 2M

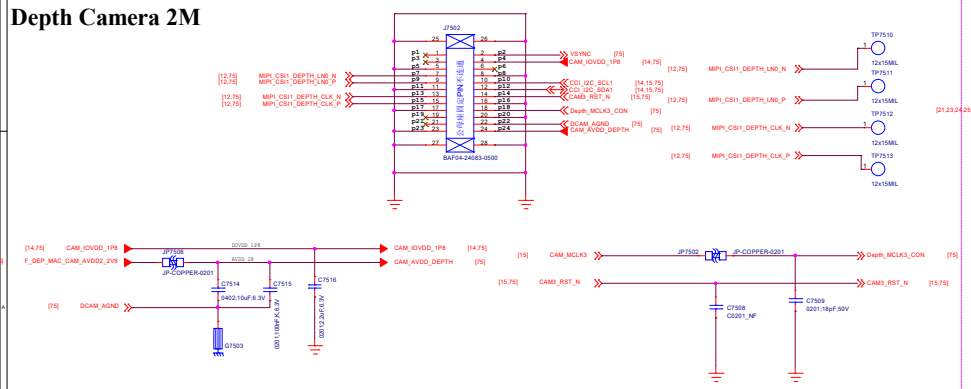

Title:	075_CAMERA IF	REV:	V1.0
DOCUMENT NO.:	88029_1_12M14_20230417_1755	Size	D
DEPARTMENT:	BB	DESIGNER:	ZHAOYUKUN
Date:	Monday, April 17, 2023	Sheet	75 of 59

078_Flash/RGB/Vibrator

Flash LED

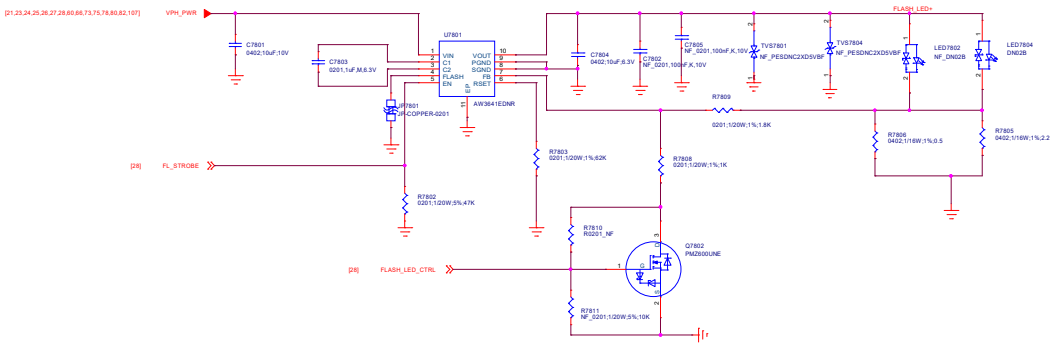

IR LED

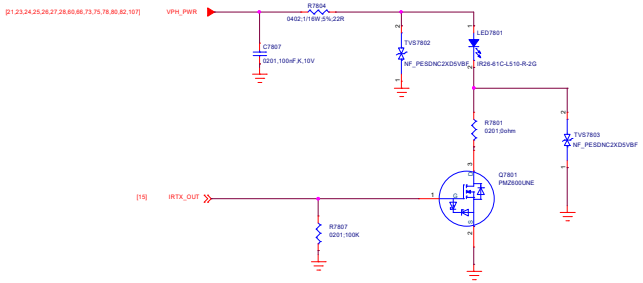

Title:	078_LED/Flash/Vibrator/IRLED	REV:	V1.0
DOCUMENT NO.:	88029_1_12M14_20230417_1755	Size	D
DEPARTMENT:	BB	DESIGNER:	ZHAOYUKUN
WINGTECH			
Date:	Monday, April 17, 2023	Sheet	76 of 59

080_FingerPrint

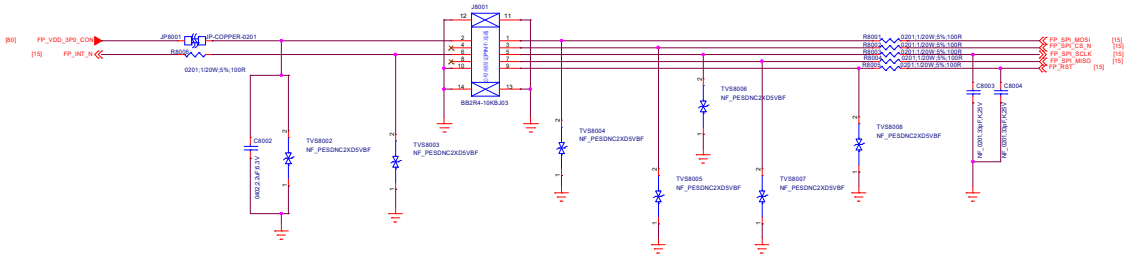

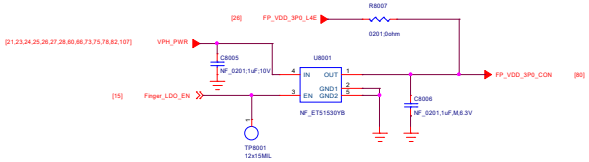

Title:	080_FingerPrint	REV:	V1.0
DOCUMENT NO.:	88029_1_12M14_20230417_1755	Size	D
DEPARTMENT:	BB	DESIGNER:	ZHAOYUKUN
WINGTECH			
Date:	Monday, April 17, 2023	Sheet	50 of 59

082_SENSORS

M-SENSOR

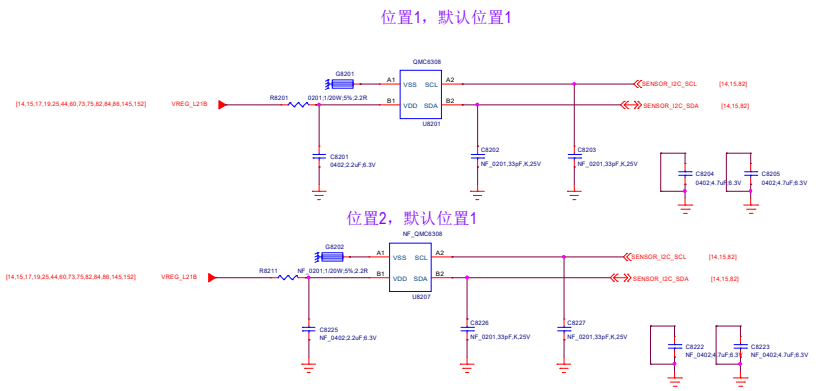

FRONT ALS SENSOR

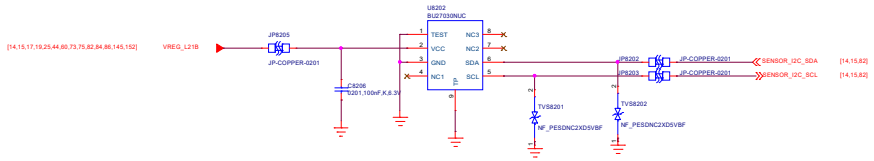

Accerometer

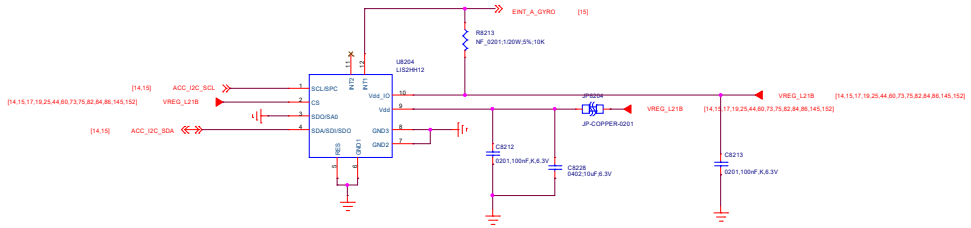

SAR SENSOR

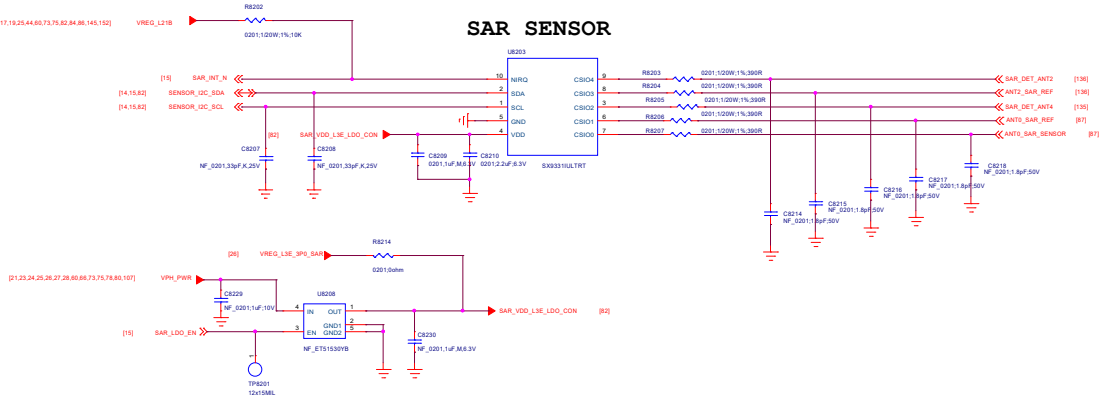

Title:	082_SENSORS	REV:	V1.0
DOCUMENT NO.:	88029_1_12M14_20230417_1755	Size	D
DEPARTMENT:	BB	DESIGNER:	ZHAOYUKUN
WINGTECH			
Date:	Monday, April 17, 2023	Sheet	52 of 59

084_SIM/TF IF

SIM CARD

SIM1

SIM2

日本版ESIM使用SN110P,
需要删除R8407 R8408 R8409 R8410 C8402

T_Card

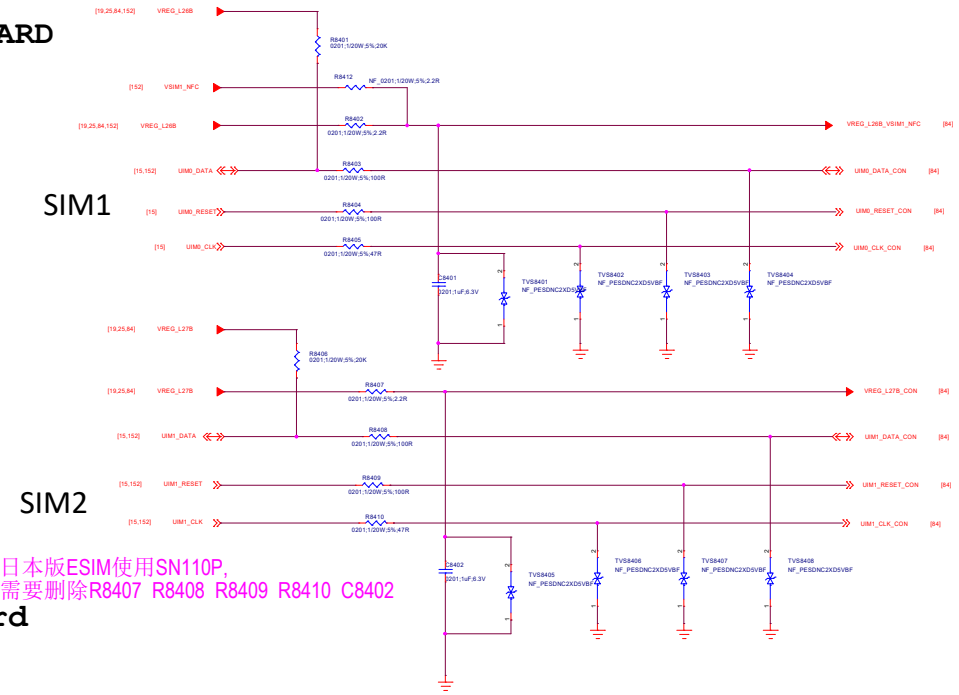

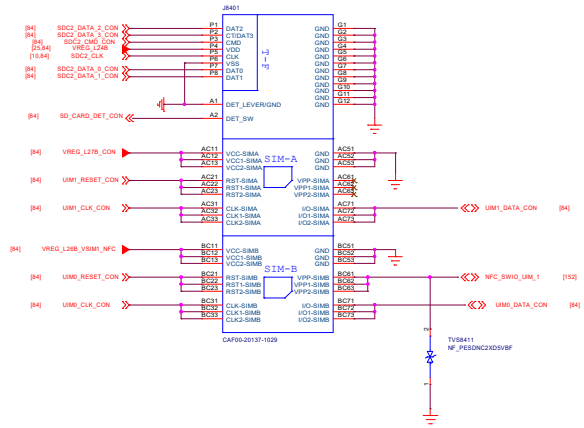

DETECT

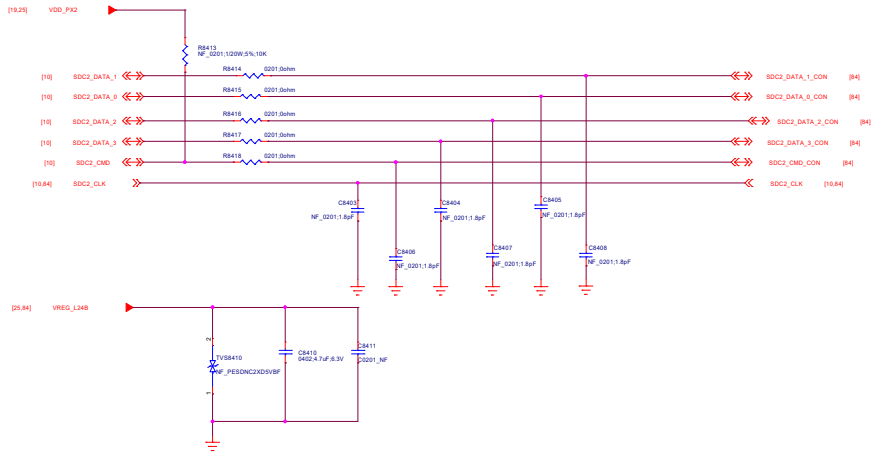

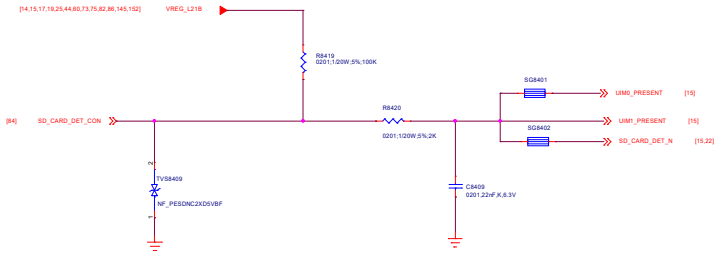

Title	Page Name = 084_SIM/TF IF	REV: V10
DOCUMENT NO.:	Design Name = 88029_1_12M14_202304	RJAF55D
DEPARTMENT:		DESIGNER:
WINGTECH		
Date:	Page Modify Date = Monday, April 17, 2023	Sheet 84 of 59

086_Testpoint/Shielding/GND

SIDEKEY

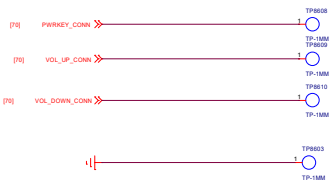

Force download

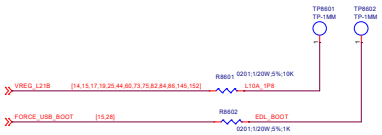

USB

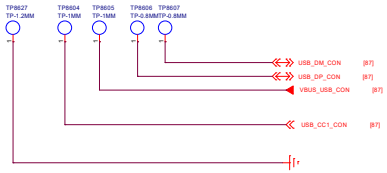

Battery

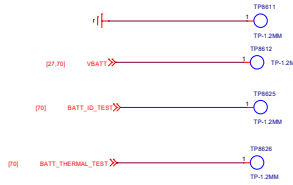

UART

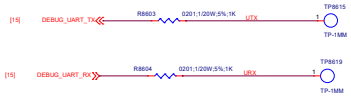

JTAG

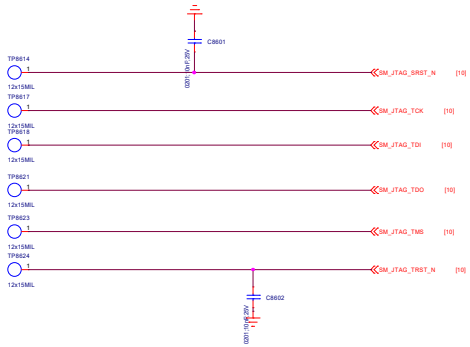

MARK/Shield/Lable/PCB

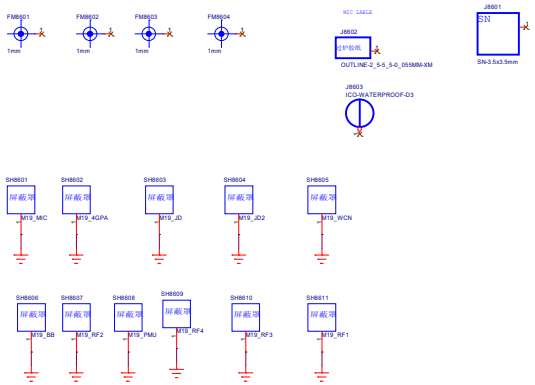

Hole

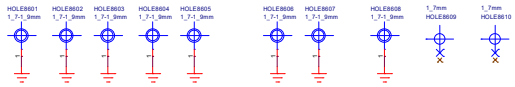

试产阶段	主板硬件版本号	HW_ID3 GPIO_62	HW_ID2 GPIO_28	HW_ID1 GPIO_25	HW_ID0 GPIO_24	ID值
Pre-P0	88019_1_90 88029_1_90	X	X	0	0	8
P0	88019_1_10 88029_1_10	X	0	0	0	0
P01	88019_1_11 88029_1_11	0	0	0	1	1
P1	88019_1_12 88029_1_12	0	0	1	0	2
P1.1	88019_1_12M13 88029_1_12M13	0	0	1	1	3
P2	88019_1_12M14 88029_1_12M14	1	0	0	0	4
MP	88019_1_12M15 88029_1_12M15	1	0	0	1	5

阻容项目名	Boadr_ID项目名	Modem版本	R8606 (k)	R8605 (k)
SB8019NA1 SB8019BA1 SB8019CA1 SB8019DA1	SB8019BA1	M19-CN	3.9	100
SB8029AA1 SB8029BA1 SB8029CA1 SB8029DA1	SB8029AA1	M19-CL	8.2	100
SB8019EA1 SB8019KA1	SB8019EA1	M19-IN	15	100
SB8019FA1 SB8019GA1 SB8019HA1 SB8019LA1	SB8019EP1	M19P-CN	27	100
SB8029FA1 SB8029GA1 SB8029HA1 SB8029LA1	SB8029FA1	M19-IF	43	100
SB8019MA1 SB8019TA1 SB8019NA1 SB8019PA1	SB8019EP1	M19P-IN	62	100
SB8019QA1 SB8019RA1 SB8019SA1 SB8019UA1	SB8019QA1	M19-CN-SAR	82	100
SB8019VA1 SB8019WA1 SB8019XA1 SB8019YA1	SB8019YA1	M19P-CN-SAR	120	100
TBD		TBD	200	100
TBD		TBD	330	100
TBD		TBD	620	100
TBD		TBD	2200	100

BOARD_ID Version

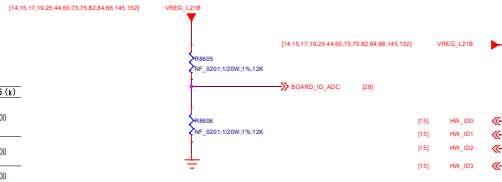

HW_ID Version

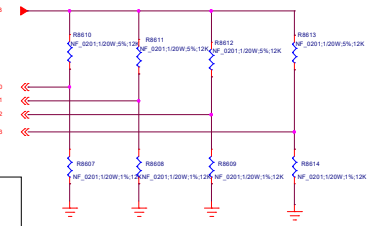

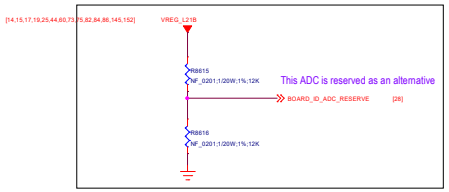

Title:	086_Testpoint/Shielding/GND	REV:	V1.0
DOCUMENT NO.:	88029_1_12M14_20230417_1755	Size	D
DEPARTMENT:	BB	DESIGNER:	ZHAOYUKUN
WINGTECH			
Date:	Monday, April 17, 2023	Sheet	86 of 59

087_Sub PCB IF

CONNECTOR

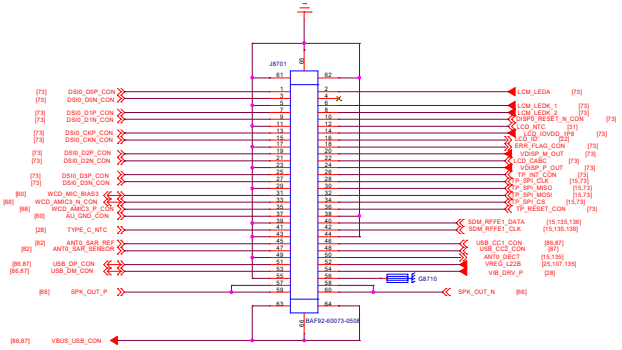

CC

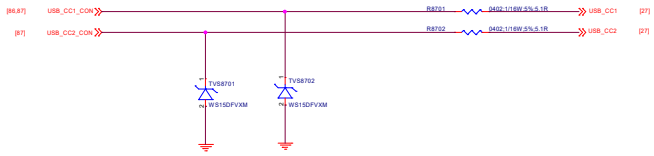

OVP

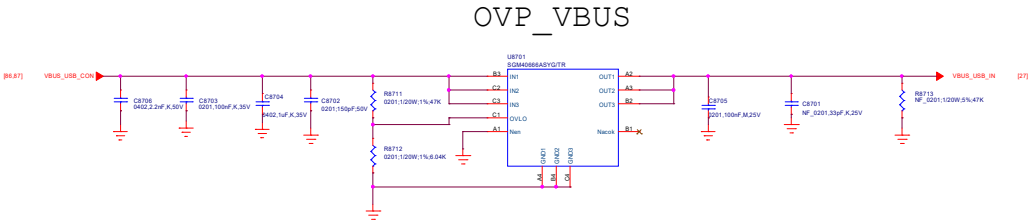

USB IF

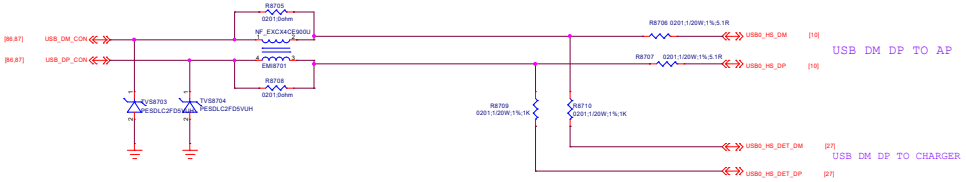

Title:	087_Sub PCB IF/USB IF	REV:	V1.0
DOCUMENT NO.:	88029_1_12M14_20230417_1755	Size	D
DEPARTMENT:	BB	DESIGNER:	ZHAOYUKUN
WINGTECH			
Date:	Monday, April 17, 2023	Sheet	87 of 59

102.RF_Transceiver_SDR435 WMSS

SDR_VDDCX Max current (mA)
VDD_CX1 320 mA
VDD_CX2 320 mA
VDD_CX3 320 mA

VREG_L10B Max current (mA)
VDD_MX0 12 mA
VDD_MX1 9 mA
VDD_MX2 87 mA
VDD_PHY 83 mA

VIO18_RFFE Max current (mA)
VDD_PX 10 mA

VREG_L6B Max current (mA)
VDDAL_DIG_1 19.75 mA
VDDAL_DIG_2 9.25 mA
VDDAL_DIG_3 12.5 mA
VDDAL_DIG_4 12.5 mA
VDDAL_GNSS 7.5 mA
VDDAL_RX_A 75.6 mA
VDDAL_RX_B 57.9 mA
VDDAL_RX_0 50 mA
VDDAL_RX_1 50 mA
VDDAL_RX_2 50 mA
VDDAL_TX0_1 52.25 mA
VDDAL_TX1_1 52.25 mA
VDDAL_XO 12 mA

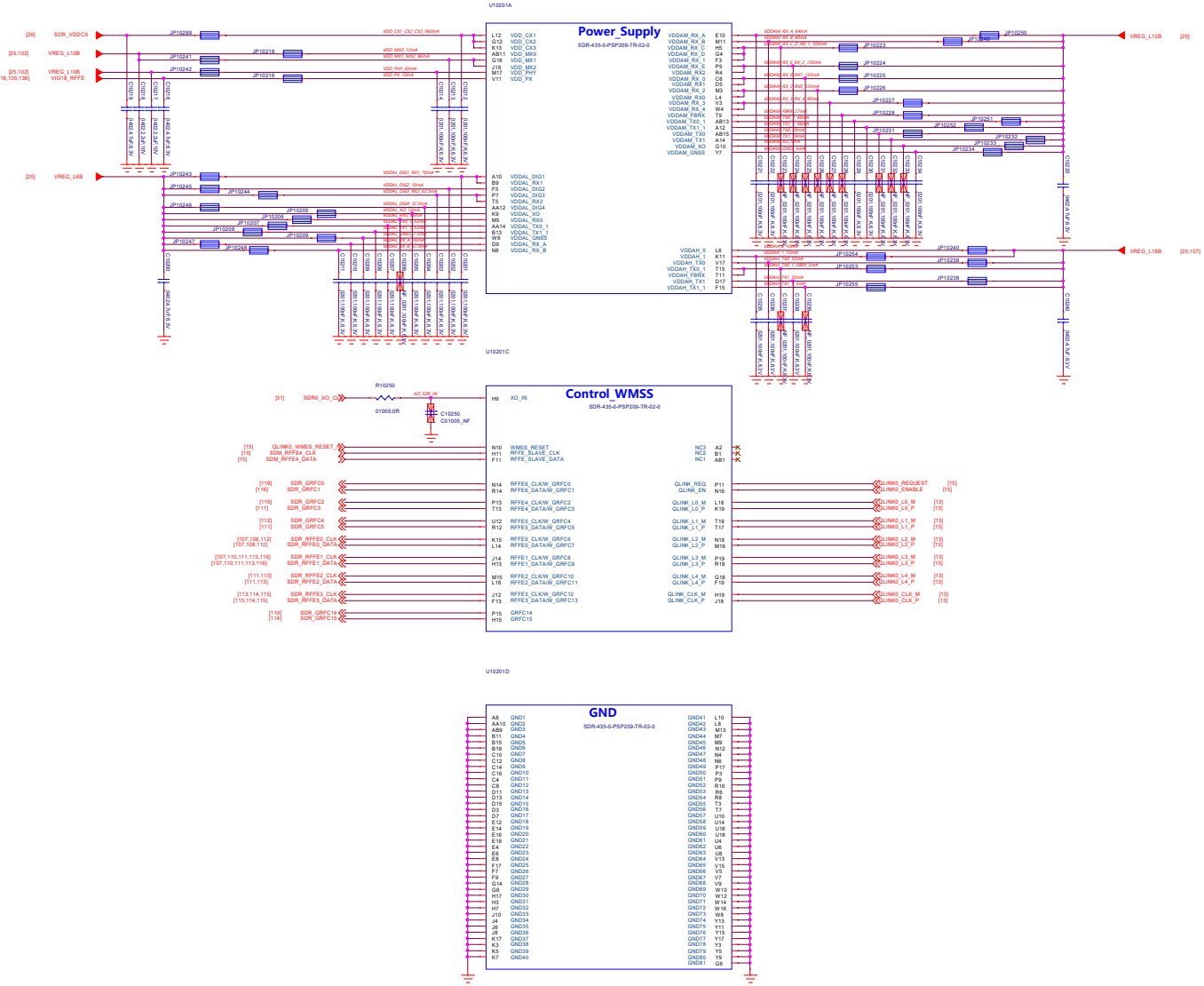

VREG_L12B Max current (mA)
VDDAM_FBRX 27 mA
VDDAM_GNSS 6 mA
VDDAM_RX_0 30 mA
VDDAM_RX_1 60 mA
VDDAM_RX_2 30 mA
VDDAM_RX_3 60 mA
VDDAM_RX_4 30 mA
VDDAM_RX_A 64 mA
VDDAM_RX_B 40 mA
VDDAM_RX_C 23 mA
VDDAM_RX_D 23 mA
VDDAM_RX_E 23 mA
VDDAM_RX0 105 mA
VDDAM_RX1 105 mA
VDDAM_RX2 107 mA

VREG_L18B Max current (mA)
VDDAH_0 10 mA
VDDAH_FBRX 15 mA
VDDAH_1 15 mA
VDDAH_TX0 55 mA
VDDAH_TX0_1 5 mA
VDDAH_TX1 55 mA
VDDAH_TX1_1 5 mA

Title:	102.RF_Transceiver_SDR435 WMSS	REV: V10
DOCUMENT NO.:	89029_1_128N4_29230417_1755	Size D
DEPARTMENT = WINGTECH-XA	DESIGNER = Xue Wei	
Date: Monday, April 17, 2023	Sheet 102 of 156	

VERSION	EDITED BY	LAST EDIT DATE
1	LAST_EDITOR	2-23-2007_10:06

103.RF_Transceiver_SDR435_TRX

REVISIONS			
LTR	DESCRIPTION	DATE	APPR
A	INITIAL RELEASE		

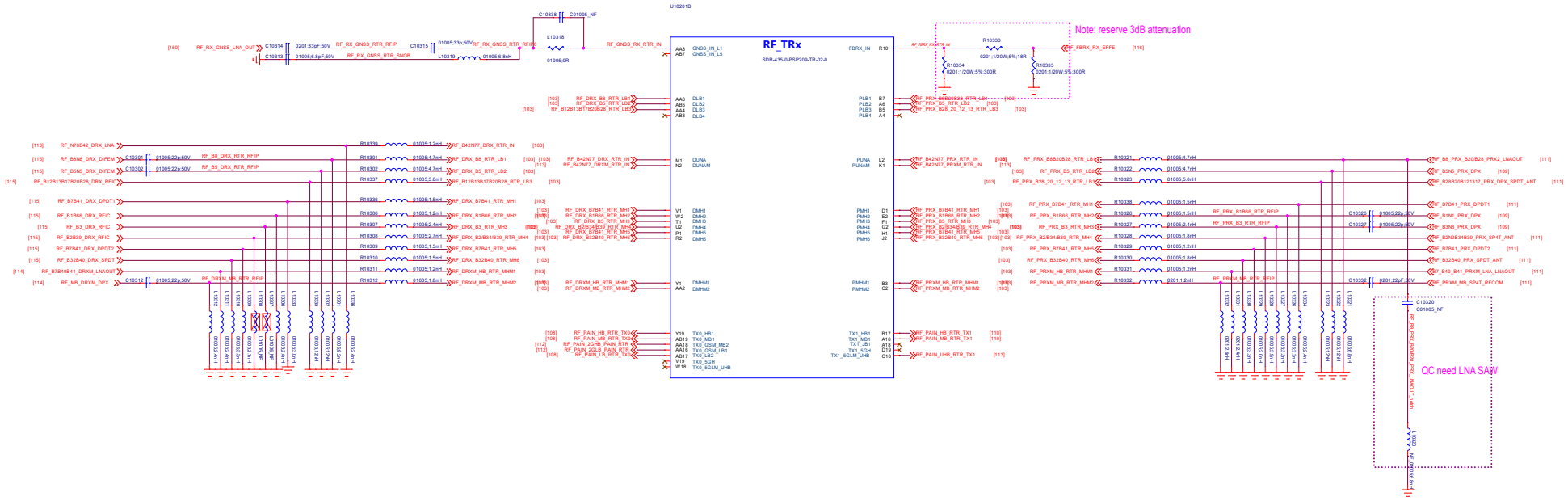

Title: 103.RF_Transceiver_SDR435_TRX		REV: V10	
DOCUMENT NO.: 88029_1_128N4_29230417_1755		Size D	
DEPARTMENT = WINGTECH-XA		DESIGNER = Xue Wei	
WINGTECH			
Date: Monday, April 17, 2023		Sheet 103 of 156	

VERSION	EDITED BY	LAST EDIT DATE
1	LAST_EDITOR	2-23-2007_10:06

107.APT/ET_QET6105

REVISIONS			
LTR	DESCRIPTION	DATE	APPROVED
A	INITIAL RELEASE		

Title: 107.APT_Module	REV: V10
DOCUMENT NO.: 88629_1_129514_20230417_1755	Size: Custom
DEPARTMENT: WINGTECH-XA	DESIGNER: Xue Wei
WINGTECH	
Date: Monday, April 17, 2023	Sheet 107 of 156

VERSION	EDITED BY	LAST EDIT DATE
1	LAST_EDITOR	2-23-2007_10:06

108MMPA_Phase5N#0

MMPA for NR FDD

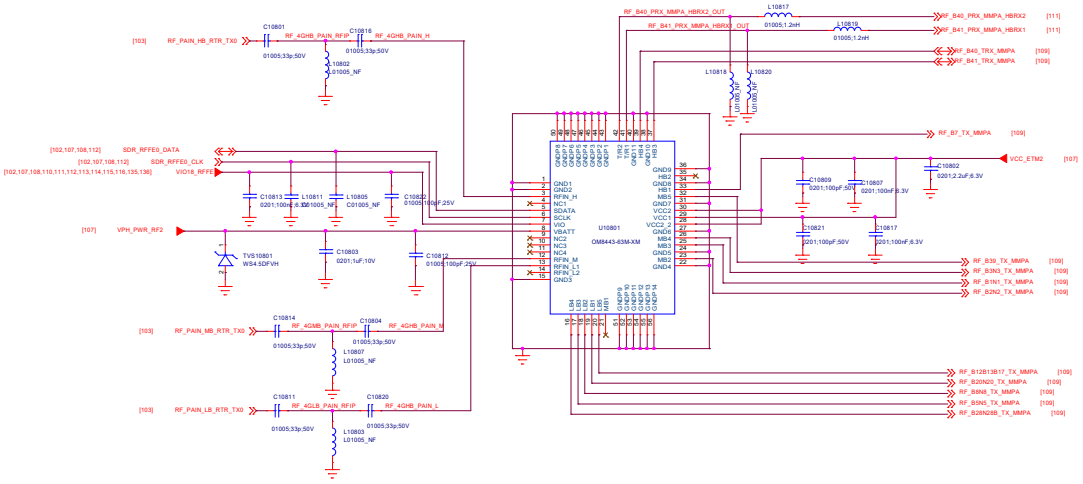

Notice: key component U10802 and U10806 should be different due to the same MIPI

JP/Asia C10828 貼片 C10827 NC
EU C10828 NC C10827 貼片

TX0 MB SP4T

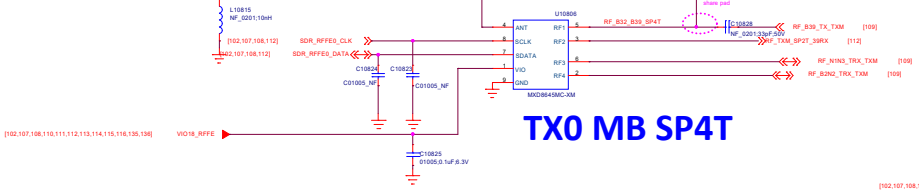

TX0 HB SP4T

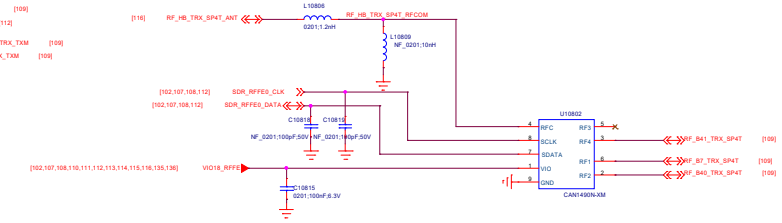

Title:			REV: V30
DOCUMENT NO.:	Design Name = 88039_1_12M14_20230415		SIZE: D
DEPARTMENT:	DEPARTMENT = RF_Xm	DESIGNER:	DESIGNER = XA0560
WINGTECH			
Date:	Page Modify Date = Monday, April 17, 2023	Sheet 108 of 156	

109.Phase5N#0_DUP

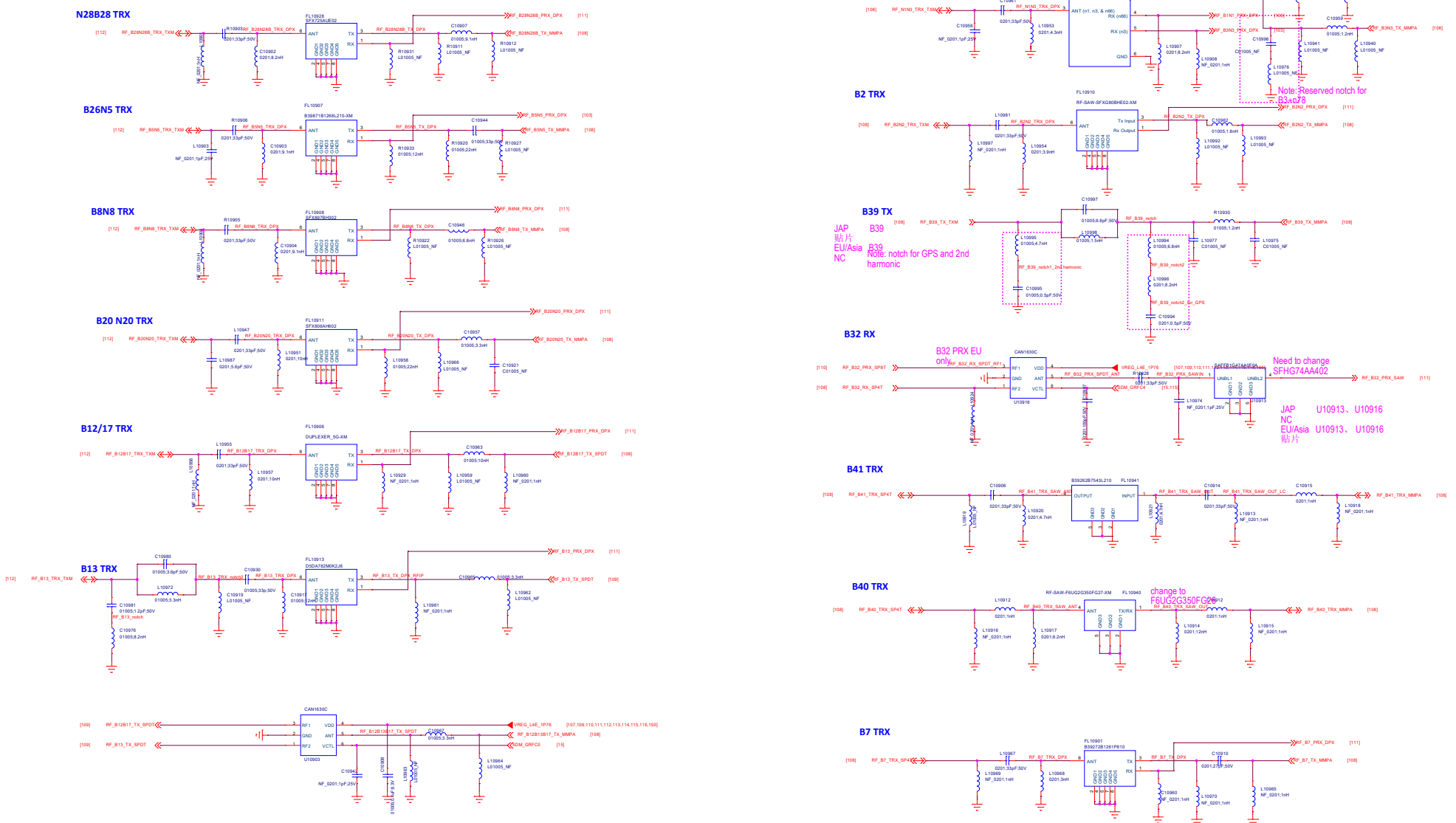

Title:			REV: V30
DOCUMENT NO.:	Design Name = 88039_1_12M14_20230417	SIZE	D
DEPARTMENT:	DEPARTMENT = RF_Xm	DESIGNER:	DESIGNER = XA0561
WINGTECH			
Date:	Page Modify Date = Monday, April 17, 2023	Sheet	109 of 156

110.MMPA_Phase5N#1

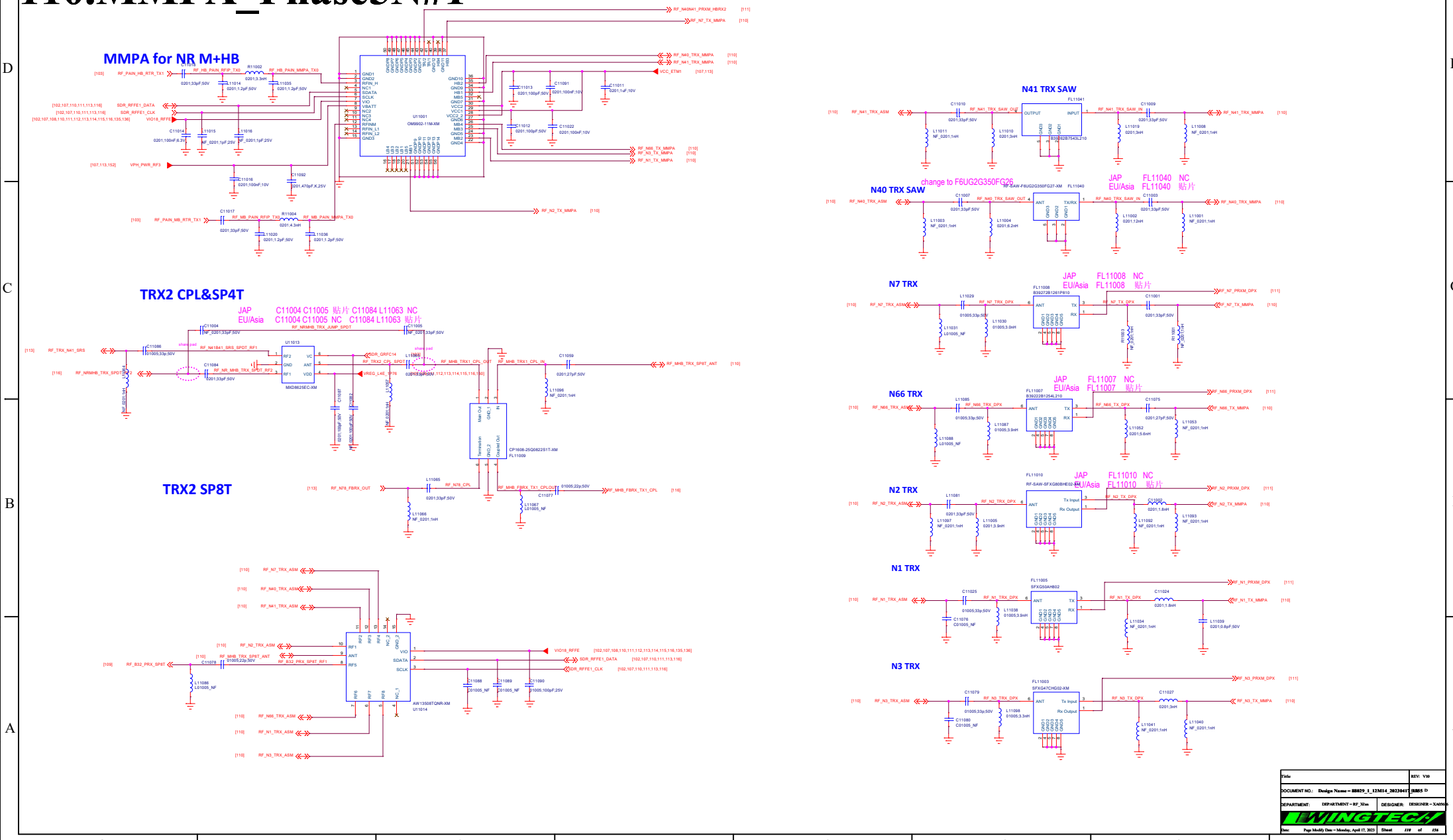

111.PRX_PRXM

B7_B40_B41_PRXM

JAP C11165 C11166 贴片 C11113 C11108 NC
EU/Aisa C11165 C11166 NC C11113 C11108 贴片

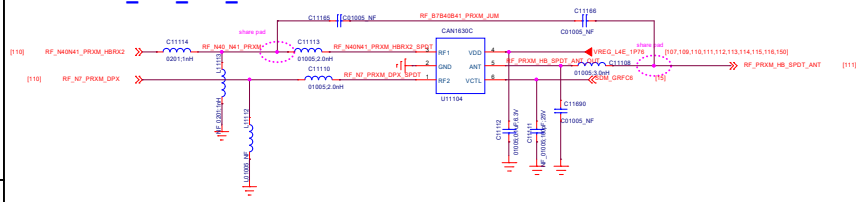

B7_B40_B41_PRXM_LNA

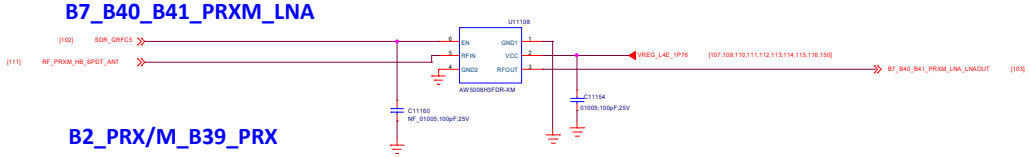

B2_PRX/M_B39_PRX

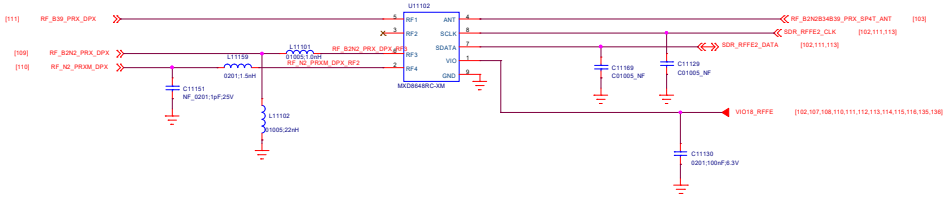

B1_B3_B66_PRXM

Notice: key component U11105 and U11302 should be different due to the same MIPI

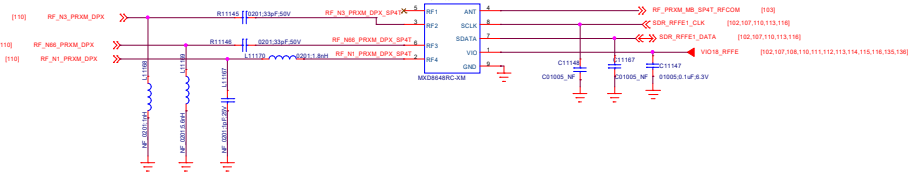

B7_B41_PRX

JAP C11146 C11144 贴片 L11107 C11103 NC
EU/Asia C11146 C11144 NC L11107 C11103 贴片

JAP C11145 C11143 贴片 C11102 R11136 NC
EU/Asia C11145 C11143 NC C11102 R11136 贴片

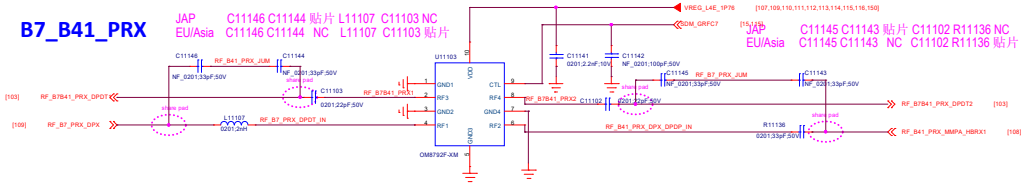

B39_PRX

JAP FL11101 贴片
EU/Asia FL11101 NC

Need to change NDFH006-1900SA

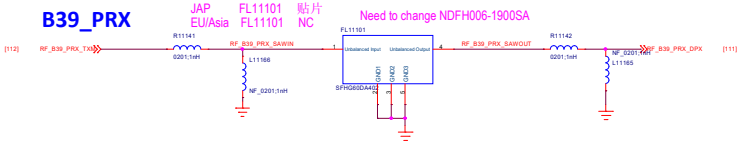

B28B20B121317_PRX

Notice: key component U11107 and U11102 should be different due to the same MIPI

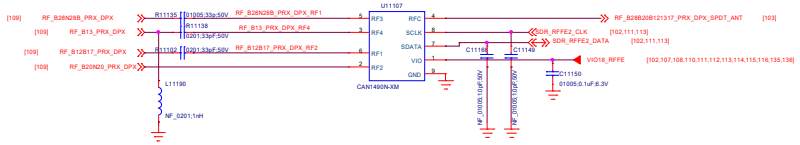

JAP/Asia C11134 C11135 贴片 L11104 C11101 NC
EU C11134 C11135 NC L11104 C11101 贴片

B32_B40_PRX

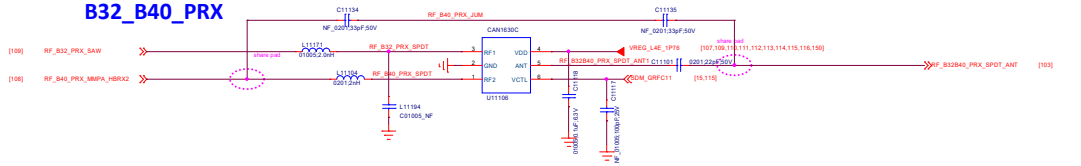

B20B28_PRX2

Need to change SFH789BBB02

JAP FL11102 NC
EU/Asia FL11102 贴片

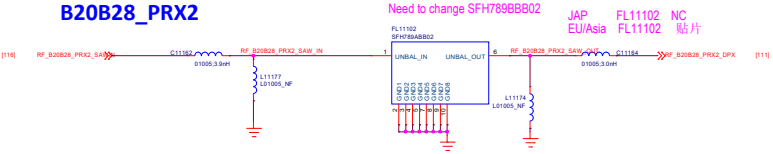

B8_PRX_B20/B28_PRX2

JAP C11152 C11155 贴片 C11163 C11157 NC
EU/Asia C11152 C11155 NC C11163 C11157 贴片

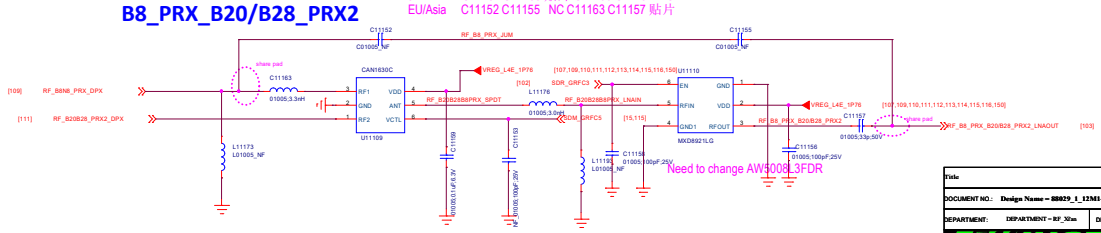

Need to change AW5008L3FDR

Title:	REV: V30
DOCUMENT NO.: Design Name = 88039_1_12M14_20230417	SIZE: D
DEPARTMENT: DEPARTMENT = RF_32m	DESIGNER: DESIGNER = X40566
WINGTECH	
Date: Page Modify Date = Monday, April 17, 2023	Sheet 111 of 156

112.TXM_VC7916-36M

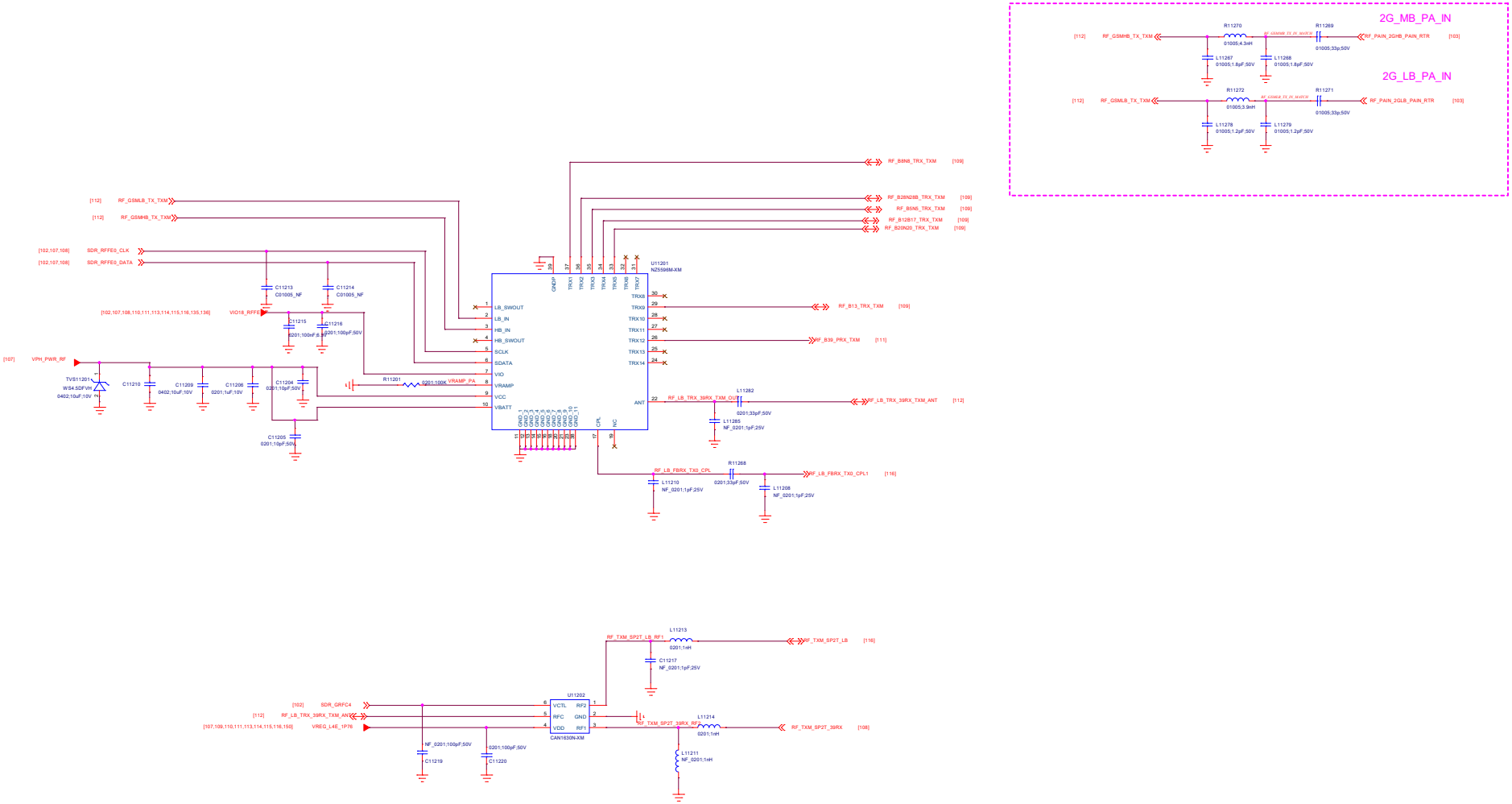

Title:	REV: V30
DOCUMENT NO.: Design Name = 88039_1_12M14_20230417	SIZE: D
DEPARTMENT: DEPARTMENT = RF_Xiao	DESIGNER: DESIGNER = XA0568
WINGTECH	
Date: Page Modify Date = Monday, April 17, 2023	Sheet 112 of 156

113.N77_N78_PAM

ANT7 SP4T

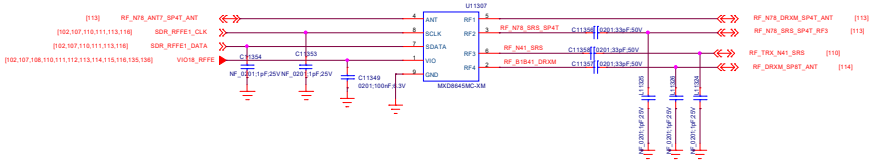

N78 SRS SP4T

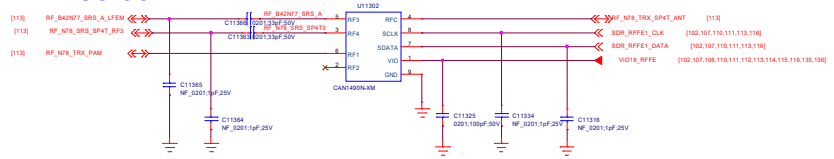

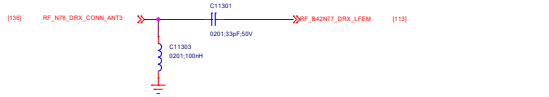

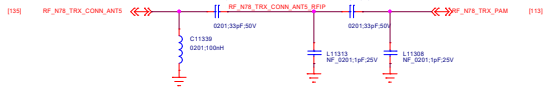

N78 LFEM PRXM/DRX

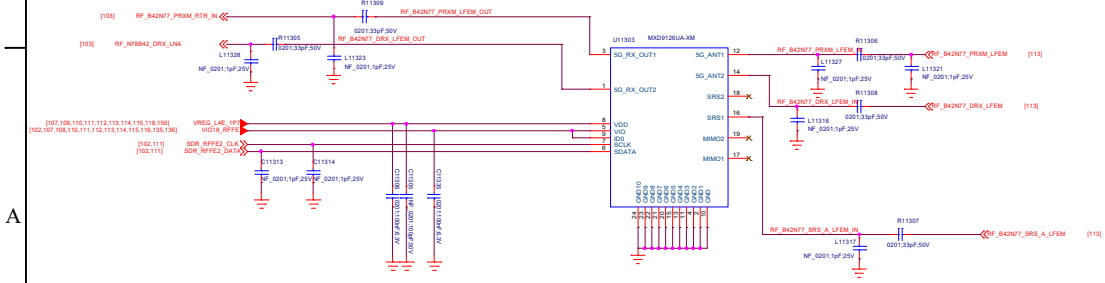

N78 PA

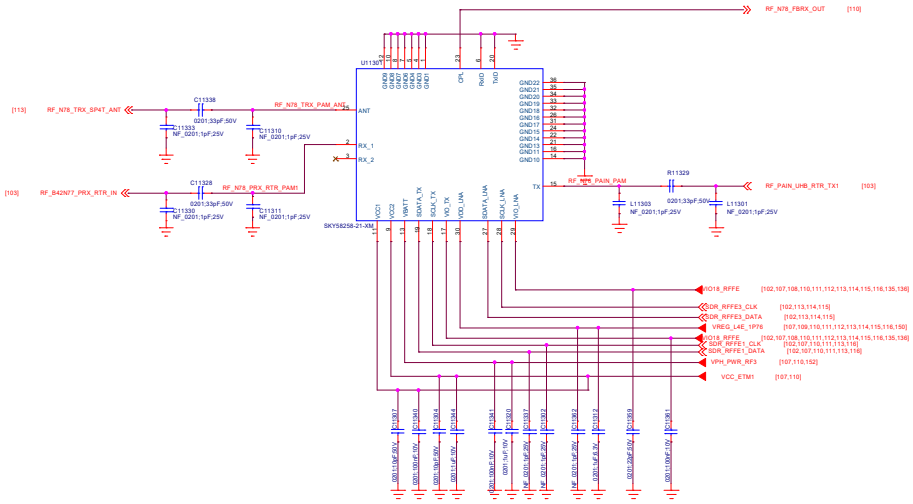

N78 LFEM DRXM

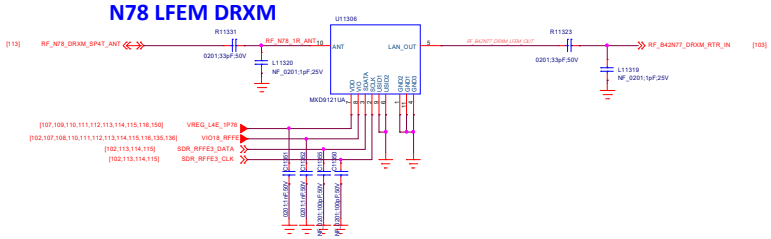

ANT1 N78+B41 DIP

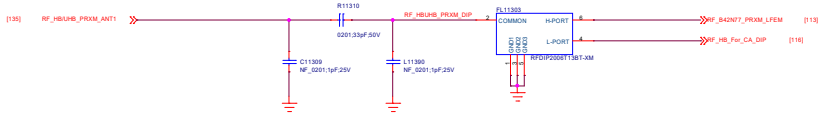

Title:			REV: V30
DOCUMENT NO.:	Design Name = 88039_1_12M14_20230417		SIZE: D
DEPARTMENT:	DEPARTMENT = RF_Xtm	DESIGNER:	DESIGNER = XA0560
WINGTECH			
Date:	Page Modify Date = Monday, April 17, 2023	Sheet 113 of 156	

114.MHB_DRX_MIMO

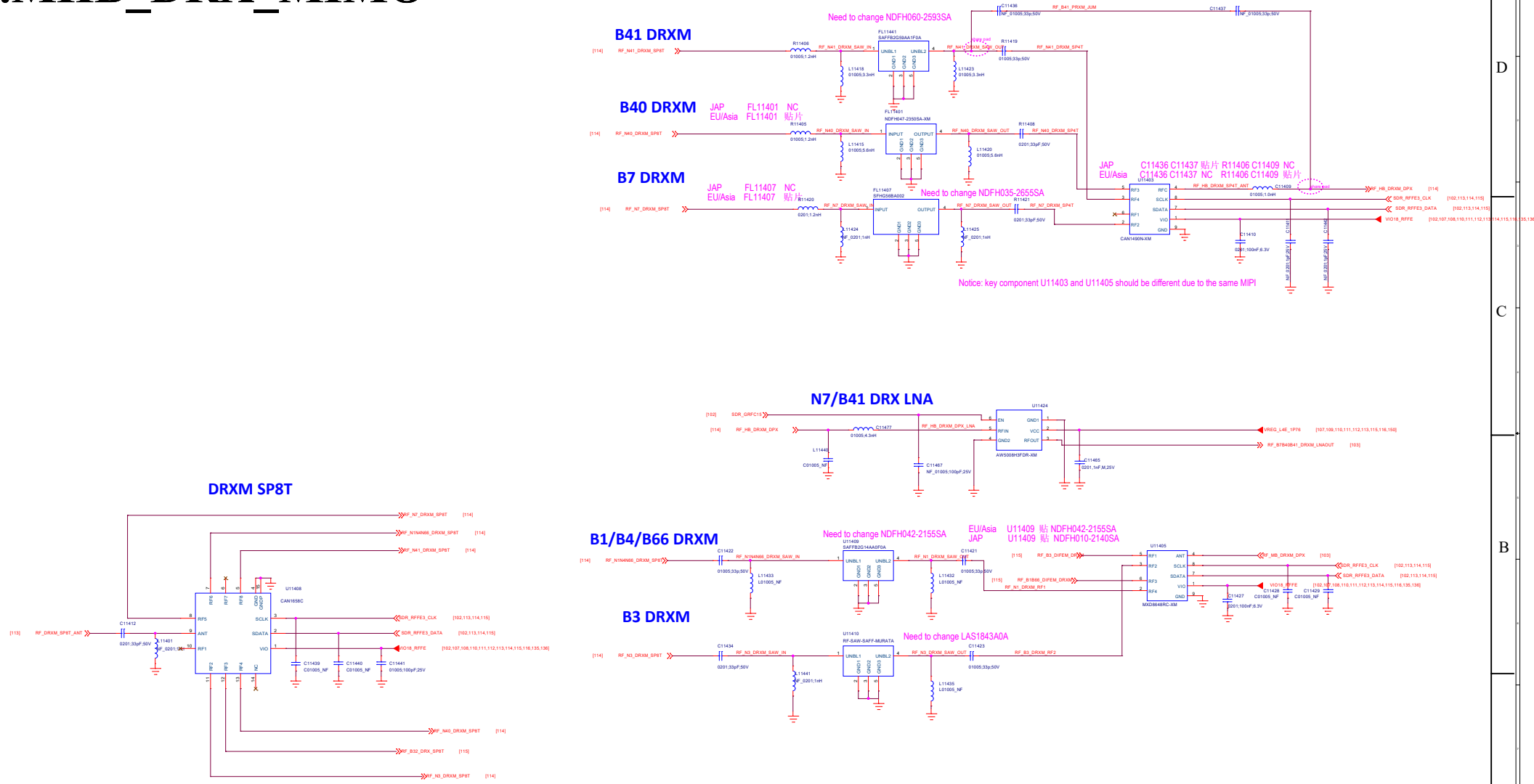

Title:	REV: V10
DOCUMENT NO.: Design Name = 88039_1_12M14_20230417	SIZE: D
DEPARTMENT: DEPARTMENT = RF_Xiao	DESIGNER: DESIGNER = X40568
WINGTECH	
Date: Page Modify Date = Monday, April 17, 2023	Sheet 114 of 156

115.DRX_MXD98E3DA

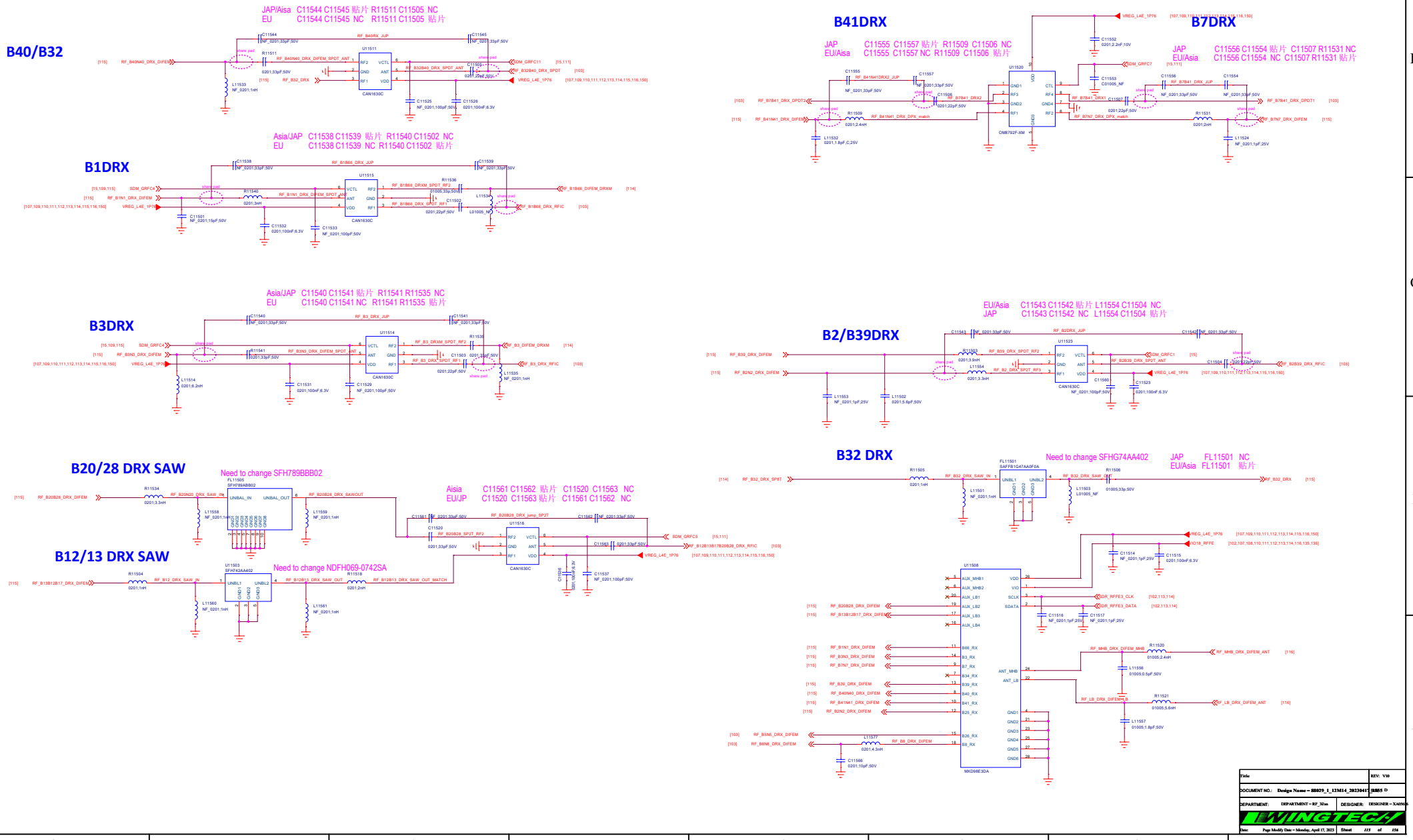

Title:	REV: V10
DOCUMENT NO.: Design Name = 88039_1_12M14_20230417	SIZE: D
DEPARTMENT: DEPARTMENT = RF_Xiao	DESIGNER: DESIGNER = XA0560
WINGTECH	
Date: Page Modify Date = Monday, April 17, 2023	Sheet 115 of 156

116.ASDIV_FBRX

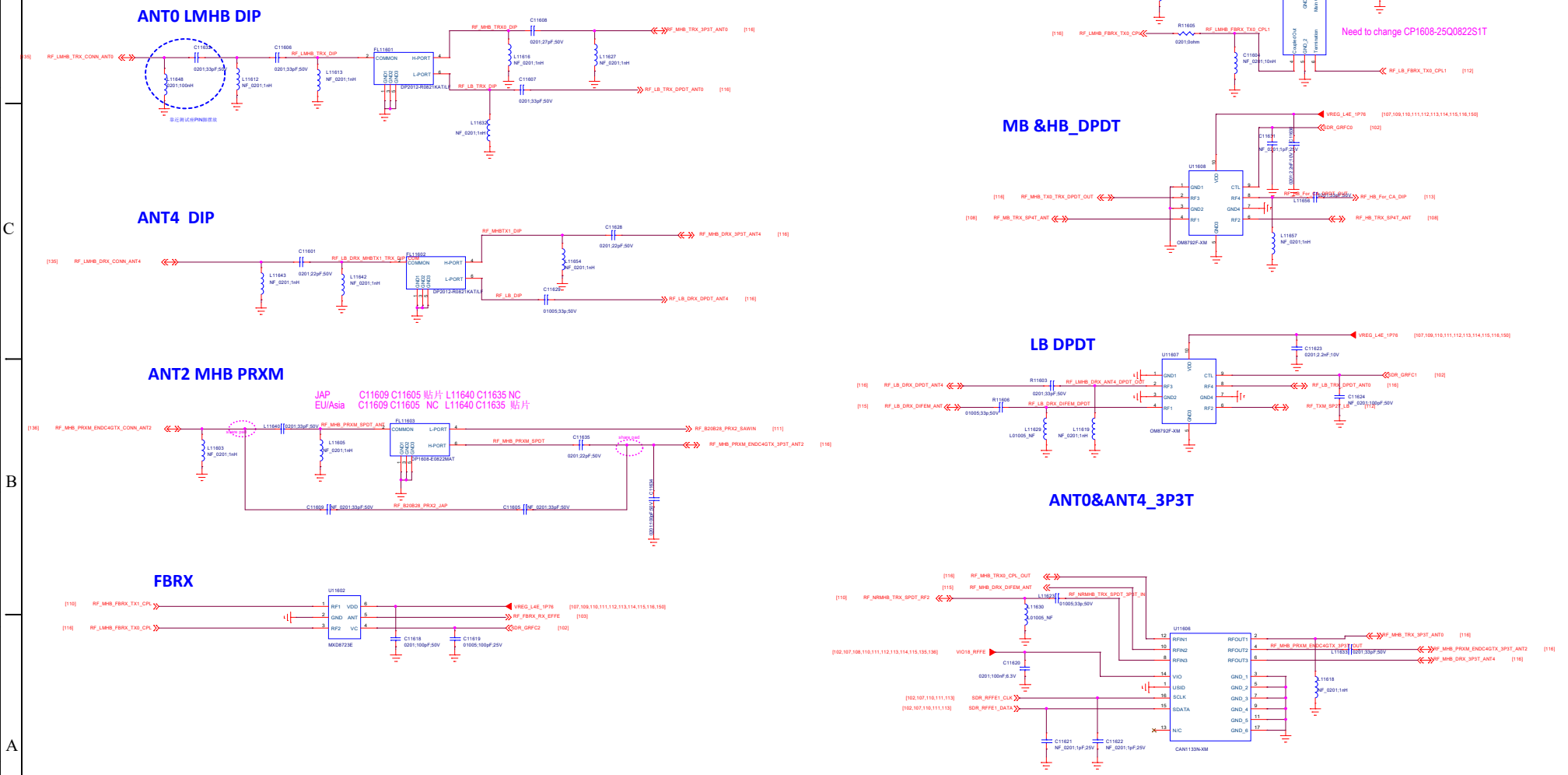

Title	REV: V30
DOCUMENT NO.: Design Name = 88039_1_12M14_20230417	SIZE: D
DEPARTMENT: DEPARTMENT = RF_Xm	DESIGNER: DESIGNER = X40566
WINGTECH	
Date: Page Modify Date = Monday, April 17, 2023	Sheet 116 of 156

135.WWAN_ANT_PART1

ANT4

DRX:4G/5G LB
PRXM:4G MHB
TRX:ENDC MHB

ANT5

N77/N78 PRI ANT

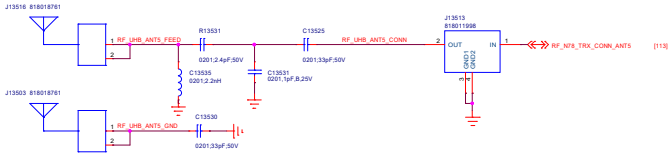

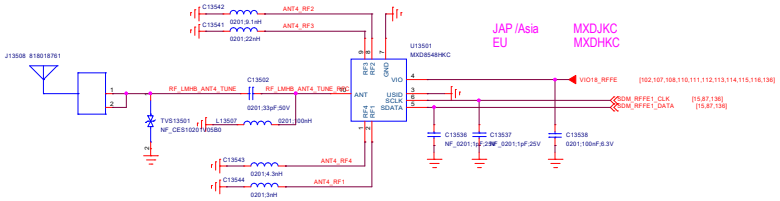

ANT0

N77/N78 PRI ANT

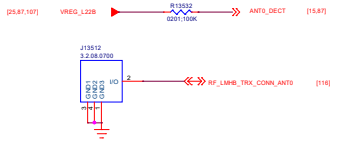

ANT1

N77/N78 PRI ANT

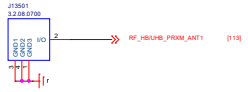

主板接地弹片

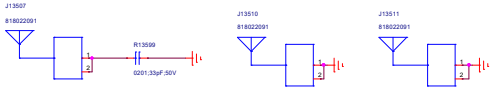

Title:			REV: V30
DOCUMENT NO.:	Design Name = 88039_1_12M14_20230417		SIZE: D
DEPARTMENT:	DEPARTMENT = RF_Xiao	DESIGNER:	DESIGNER = XA0566
WINGTECH			
Date:	Page Modify Date = Monday, April 17, 2023	Sheet 135 of 156	

136.WWAN_ANT_PART2

ANT2
MHB PRX MIMO

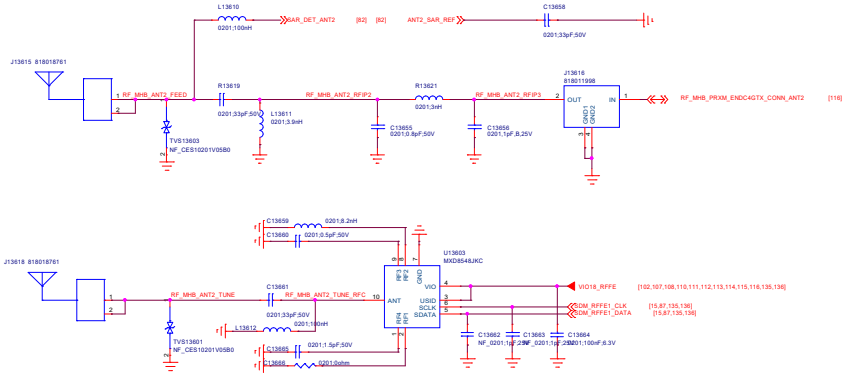

ANT3
N77/N78 PRI MIMO ANT

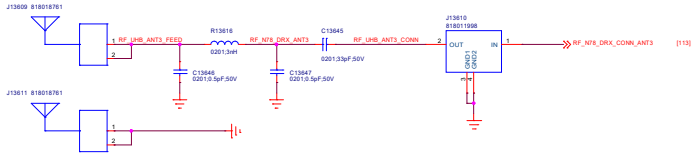

ANT7
MHB DRX MIMO

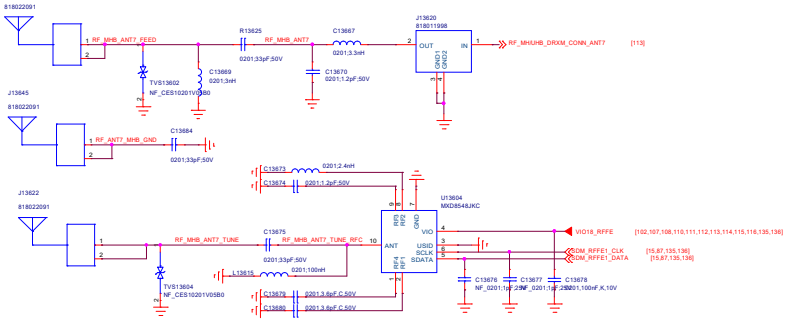

Title:			REV: V30
DOCUMENT NO.:	Design Name = 88039_1_12M14_20230417		SIZE: D
DEPARTMENT:	DEPARTMENT = RF_Xm	DESIGNER:	DESIGNER = X40566
WINGTECH			
Date:	Page Modify Date = Monday, April 17, 2023	Sheet 136 of 156	

144.Connectivity_ANT

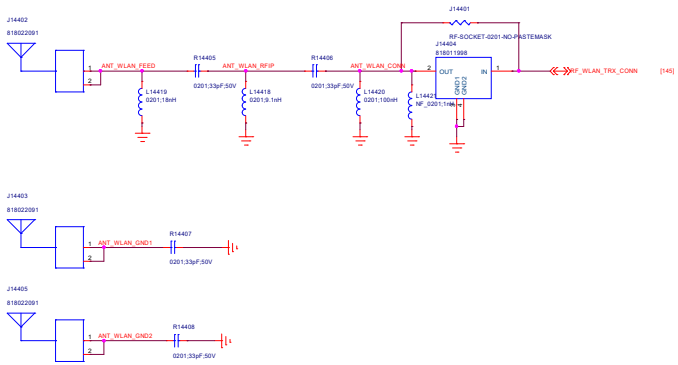

Title:			REV: V10
DOCUMENT NO.:	Design Name = 88039_1_12M14_20230417		SIZE: D
DEPARTMENT:	DEPARTMENT = RF_Xiao	DESIGNER:	DESIGNER = XA0506
WINGTECH			
Date:	Page Modify Date = Monday, April 17, 2023	Sheet 144 of 156	

145.Connectivity_WCN3950

WLAN 5G

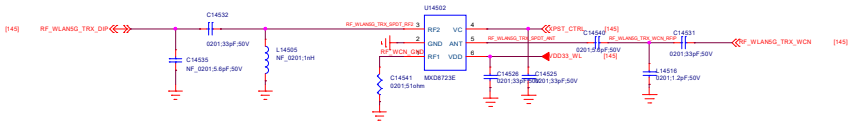

WLAN 2.4G

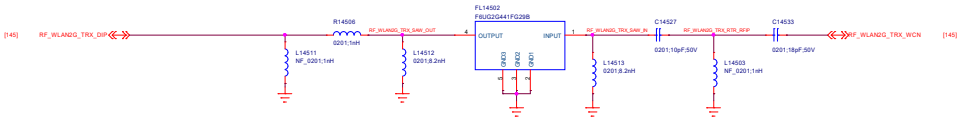

WLAN CH0 TRIP

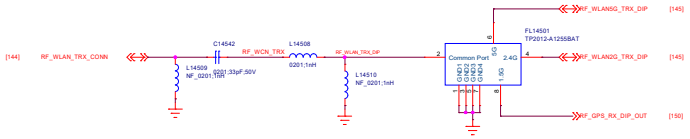

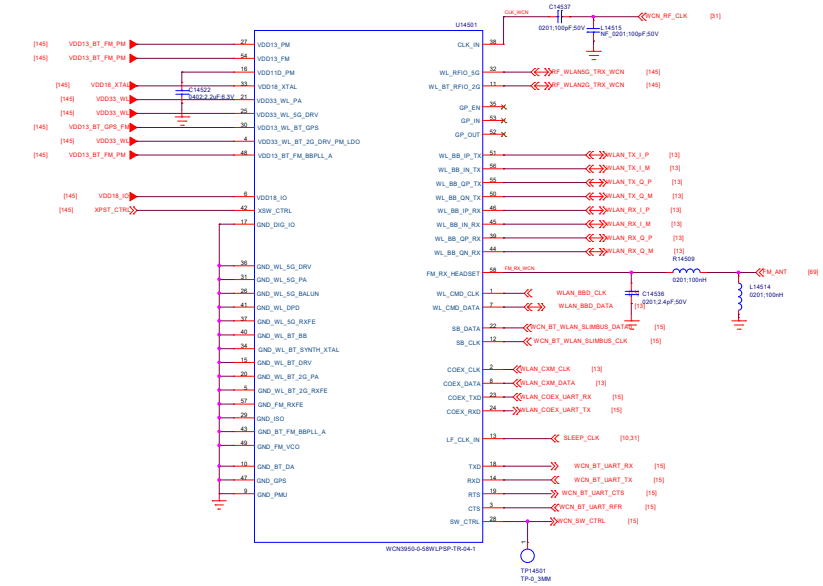

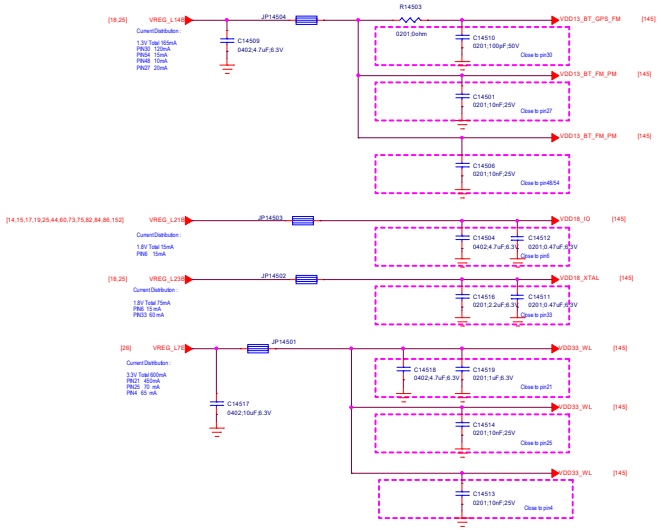

Title:			REV: V30
DOCUMENT NO.:	Design Name = 88039_1_12M14_20230417		SIZE: D
DEPARTMENT:	DEPARTMENT = RF_Xiao	DESIGNER:	DESIGNER = XA0566
WINGTECH			
Date:	Page Modify Date = Monday, April 17, 2023	Sheet 145 of 156	

150.GPS

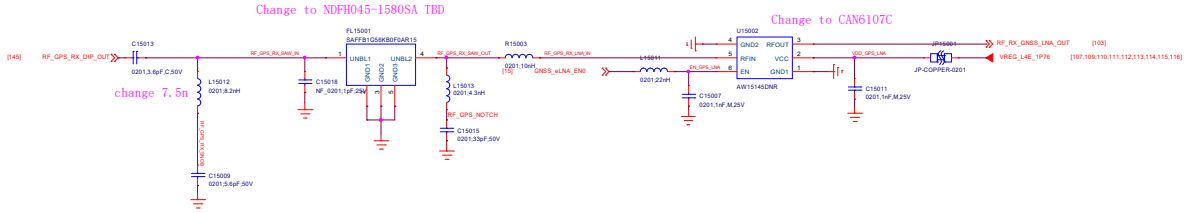

Title:			REV: V30
DOCUMENT NO.:	Design Name = 88039_1_12M14_20230417		SIZE: D
DEPARTMENT:	DEPARTMENT = RF_Xtm	DESIGNER:	DESIGNER = XA0506
WINGTECH			
Date:	Page Modify Date = Monday, April 17, 2023	Sheet 150 of 156	

152.NFC_SN100T

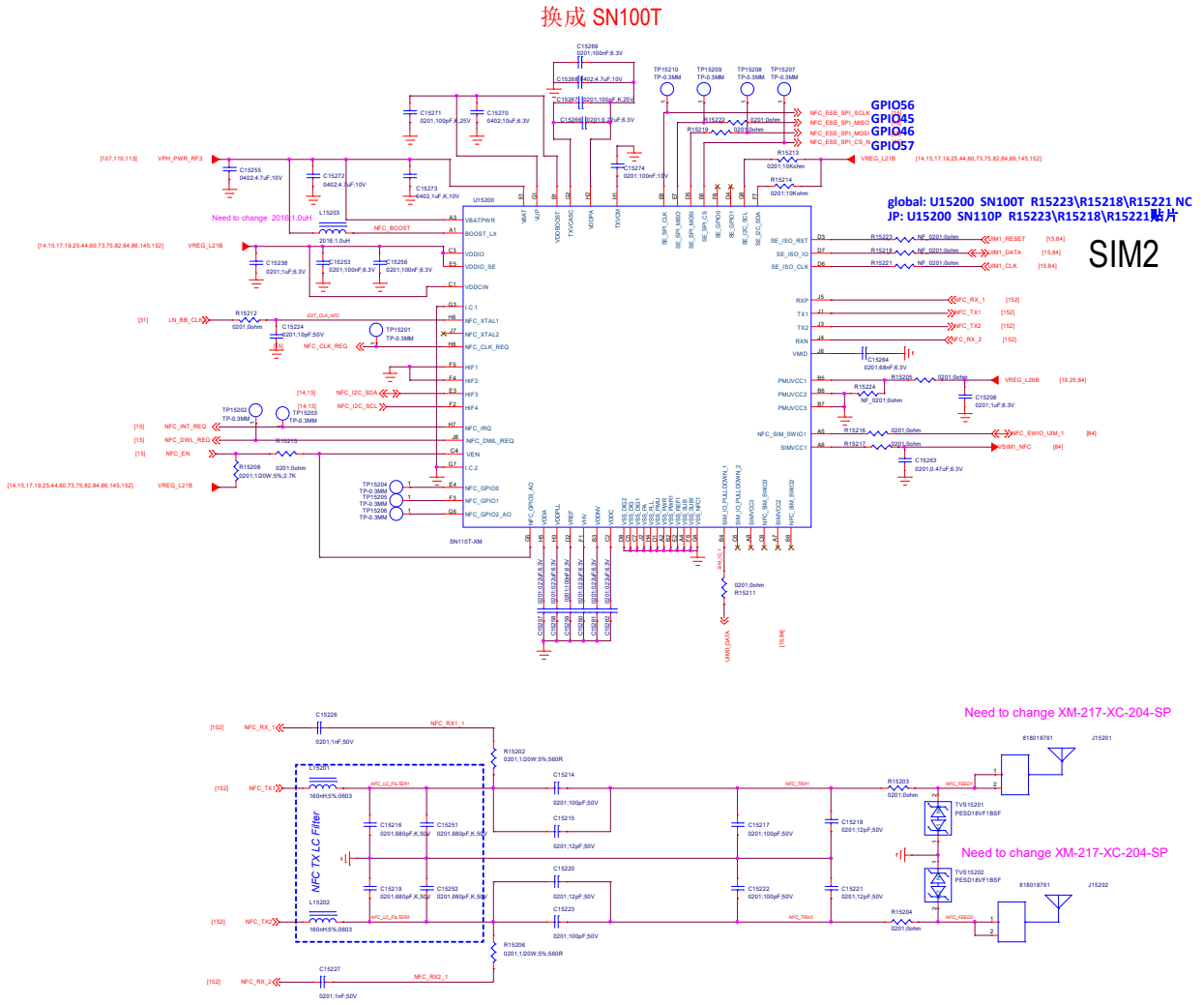

Title:	REV: V30
DOCUMENT NO.: Design Name = 88039_1_12M14_20230415	SIZE: D
DEPARTMENT: DEPARTMENT = RF_Xiao	DESIGNER: DESIGNER = XA0560
WINGTECH	
Date: Page Modify Date = Monday, April 17, 2023	Sheet 152 of 156